Pioneer sound.vision.soul

Service Manual

ORDER NO.
ARP3309

PLASMA DISPLAY

PDP-506PE
PDP-506PG
PRO-506PU

THIS MANUAL IS APPLICABLE TO THE FOLLOWING MODEL(S) AND TYPE(S).

Model	Type	Power Requirement	Remarks
PDP-506PE	WYVIXK	AC220 - 240V	
PDP-506PG	TLDPFT	AC110 - 240V	
PRO-506PU	KUCXC	AC120V	

● This service manual should be used together with the following manual(s):

Model No.	Order No.	Remarks
PDP-506PE/WYVI	ARP3267	SAFETY INFORMATION, EXPLODED VIEWS AND PARTS LIST, BLOCK DIAGRAM, PCB PARTS LIST, ADJUSTMENT, IC INFORMATION etc.

PIONEER CORPORATION 4-1, Meguro 1-chome, Meguro-ku, Tokyo 153-8654, Japan
PIONEER ELECTRONICS (USA) INC. P.O. Box 1760, Long Beach, CA 90801-1760, U.S.A.
PIONEER EUROPE NV Haven 1087, Keetberglaan 1, 9120 Melsele, Belgium
PIONEER ELECTRONICS ASIACENTRE PTE. LTD. 253 Alexandra Road, #04-01, Singapore 159936
©PIONEER CORPORATION 2005

T – ZZY SEPT. 2005 Printed in Japan

1. CONTRAST OF MISCELLANEOUS PARTS

NOTES:
- *Parts marked by "NSP" are generally unavailable because they are not in our Master Spare Parts List.*
- *The ⚠ mark found on some component parts indicates the importance of the safety factor of the part. Therefore, when replacing, be sure to use parts of identical designation.*
- *Screws adjacent to ▼ mark on product are used for disassembly.*
- *Reference Nos. indicate the pages and Nos. in the service manual for the base model.*
- *When ordering resistors, first convert resistance values into code form as shown in the following examples.*

Ex.1 When there are 2 effective digits (any digit apart from 0), such as 560 ohm and 47k ohm (tolerance is shown by J=5%, and K=10%).

560 → 56 x 10^1 → 561 ..... RD1/4PU 5 6 1 J
47k → 47 x 10^3 → 473 ..... RD1/4PU 4 7 3 J
0.5 → R50 ..... RN2H R 5 0 K
1 → 1R0 ..... RS1P 1 R 0 K

Ex.2 When there are 3 effective digits (such as in high precision metal film resistors).

5.62k → 562 x 10^1 → 5621 ..... RN1/4PC 5 6 2 1 F

■ CONTRAST TABLE

PDP-506PE/WYVIXK, PDP-506PG/TLDPFT, PRO-506PU/KUCXC and PDP-506PE/WYVI are constructed the same except for the following :

Ref. No.	Mark	Symbol and Description	Part No.				Remarks
			PDP-506PE WYVI	PDP-506PE WYVIXK	PDP-506PG TLDPFT	PRO-506PU KUCXC	
		PCB ASSY					
P17 - 1	NSP	50 X DRIVE ASSY	AWV2257	AWV2257	AWV2209	AWV2209	
		└ 50 X DRIVE ASSY	AWW1075	AWW1075	AWW1020	AWW1020	
P17 - 4		50 Y DRIVE ASSY	AWV2258	AWV2258	AWV2210	AWV2210	
		PACKING					
P9 - 1	⚠	Power Cord	ADG1214	ADG1214	Not used	ADG1215	
P9 - 4		Polyethlene Bag-S	AHG1338	AHG1326	ADG1338	AHG1348	
P9 - 5	NSP	Catalogue Bag	AHG1340	Not used	Not used	AHG1347	
P9 - 6	NSP	Warranty card	ARY1114	ARY1114	Not used	ARY1123	
P9 - 7		Ferrite Core	ATX1039	ATX-1039	ATX-1039	Not used	
P9 - 8		Pad (50T-L)	AHA2427	AHA2451	AHA2427	AHA2459	
P9 - 9		Pad (50T-R)	AHA2428	AHA2452	AHA2428	AHA2460	
P9 - 10		Pad (50B-L)	AHA2429	AHA2453	AHA2429	AHA2461	
P9 - 11		Pad (50B-R)	AHA2430	AHA2454	AHA2430	AHA2462	
P9 - 12		Power Cord Case	AHC1073	AHC1067	AHC1073	Not used	
P9 - 13		Under Carton (50)	AHD3344	Not used	AHD3344	Not used	
P9 - 13		Under Carton (506)	Not used	AHD3371	Not used	Not used	
P9 - 13		Under Carton (506PU)	Not used	Not used	Not used	AHD3379	
P9 - 14		Upper Carton (506PE)	AHD3345	AHD3372	Not used	Not used	
P9 - 14		Upper Carton (506PG)	Not used	Not used	AHD3420	Not used	
P9 - 14		Upper Carton (506EL)	Not used	Not used	Not used	AHD3381	
P9 - 15		Mirror Mat	AHG1284	AHG1327	AHG1284	AHG1352	
P9 - 16		Caution Card	ARM1232	ARM1232	ARM1232	ARM1239	
		REAR SECTION					
P11 - 6	NSP	Name Label (50PE)	AAL2661	AAL2675	Not used	Not used	
P11 - 6	NSP	Name Label (506PG)	Not used	Not used	AAL2711	Not used	
P11 - 6	NSP	Name Label (506EL)	Not used	Not used	Not used	AAL2677	
P11 - 7		Bolt Caution Label	AAX3117	AAX3005	AAX3117	AAX3075	
P11 - 8		AC Label PE	AAX3194	AAX3194	Not used	Not used	
		FRONT SECTION					
P13 - 1		Front Case Assy (506PE)	AMB2861	AMB2861	AMB2861	Not used	
P13 - 1		Front Case Assy (506EL)	Not used	Not used	Not used	AMB2857	
P13 - 3		Badge	AAM1098	AAM1098	AAM1098	Not used	
P13 - 3		Elite Badge	Not used	Not used	Not used	AAM1102	
		CHASSIS SECTION (2/2)					
P17 - 17		6P Housing Wire (J109)	ADX3118	ADX3118	ADX3118	ADX3132	
P17 - 18		12P Housing Wire (J110)	ADX3119	ADX3119	ADX3119	ADX3133	
P17 - 20		3P Housing Wire (J113)	ADX3122	ADX3122	ADX3122	ADX3136	

Note: For PCB ASSEMBLIES, Refer to " CONTRAST OF PCB ASSEMBLIES ".

■ CONTRAST OF PCB ASSEMBLIES

• 50 X DRIVE ASSY

AWW1020 and AWW1075 are constructed the same except for the following :

Mark	Symbol and Description	Part No.		Remarks
		AWW1075	AWW1020	
	[50 X RESONANCE BLOCK]			
	IC1101	AXF1142	AXF1155	
	C1101	ACG1112 (0.22 UF/250V)	ACG1088 (0.1UF/250V)	
	C1106 - C1110	Not used	ACE1178	
	C1112, C1113	ACG1112 (0.22UF/250V)	Not used	
	C1161 - C1164, C1166	ACE1168	Not used	

• 50 Y DRIVE ASSY

AWV2210 and AWZ2258 are constructed the same except for the following :

Mark	Symbol and Description	Part No.		Remarks
		AWV2258	AWV2210	
	[50 Y RESONANCE BLOCK]			
	IC2101	AXF1142	AXF1155	
	C2103	ACG1112 (0.22UF/250V)	ACG1088 (0.1UF/250V)	
	C2107, C2108	ACG1112 (0.22UF/250V)	Not used	
	C2131- C2134, C2136	ACE1168	ACE1178	
	[50 Y SUS BLOCK]			
	C2271	ACG1124 (0.1UF/100V)	ACG1118 (0.33UF/100V)	
	C2272	ACG1124 (0.1UF/100V)	Not used	

Pioneer sound.vision.soul

Service Manual

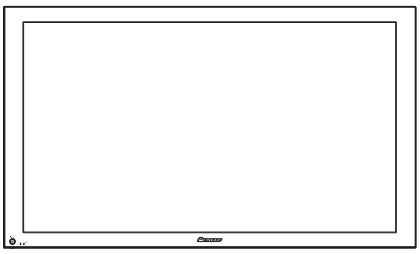

PDP-506PE

ORDER NO.
ARP3267

PLASMA DISPLAY

PDP-506PE
PDP-506PU

THIS MANUAL IS APPLICABLE TO THE FOLLOWING MODEL(S) AND TYPE(S).

Model	Type	Power Requirement	Remarks
PDP-506PE	WYVI	AC220 - 240V	
PDP-506PU	KUCXC	AC120V	

Note:
Media Receivers up to Generation 5 (G5) cannot be connected with this unit.
Be sure to use a Media Receiver of Generation 6 (G6) (ex.: PDP-R06∗∗, etc.).

For details, refer to "Important Check Points for good servicing".

PIONEER CORPORATION 4-1, Meguro 1-chome, Meguro-ku, Tokyo 153-8654, Japan
PIONEER ELECTRONICS (USA) INC. P.O. Box 1760, Long Beach, CA 90801-1760, U.S.A.
PIONEER EUROPE NV Haven 1087, Keetberglaan 1, 9120 Melsele, Belgium
PIONEER ELECTRONICS ASIACENTRE PTE. LTD. 253 Alexandra Road, #04-01, Singapore 159936
ⓒ**PIONEER CORPORATION 2005**

T-IZY SEPT. 2005 printed in Japan

SAFETY INFORMATION

This service manual is intended for qualified service technicians ; it is not meant for the casual do-it-yourselfer. Qualified technicians have the necessary test equipment and tools, and have been trained to properly and safely repair complex products such as those covered by this manual.
Improperly performed repairs can adversely affect the safety and reliability of the product and may void the warranty. If you are not qualified to perform the repair of this product properly and safely, you should not risk trying to do so and refer the repair to a qualified service technician.

WARNING
This product contains lead in solder and certain electrical parts contain chemicals which are known to the state of California to cause cancer, birth defects or other reproductive harm.

Health & Safety Code Section 25249.6 - Proposition 65

NOTICE
(FOR CANADIAN MODEL ONLY)
Fuse symbols (fast operating fuse) and/or (slow operating fuse) on PCB indicate that replacement parts must be of identical designation.

REMARQUE
(POUR MODÈLE CANADIEN SEULEMENT)
Les symboles de fusible (fusible de type rapide) et/ou (fusible de type lent) sur CCI indiquent que les pièces de remplacement doivent avoir la même désignation.

SAFETY PRECAUTIONS

NOTICE : Comply with all cautions and safety related notes located on or inside the cabinet and on the chassis.

The following precautions should be observed :

1. When service is required, even though the PDP UNIT an isolation transformer should be inserted between the power line and the set in safety before any service is performed.
2. When replacing a chassis in the set, all the protective devices must be put back in place, such as barriers, nonmetallic knobs, adjustment and compartment covershields, isolation resistor-capacitor, etc.
3. When service is required, observe the original lead dress. Extra precaution should be taken to assure correct lead dress in the high voltage circuitry area.
4. Always use the manufacture's replacement components. Especially critical components as indicated on the circuit diagram should not be replaced by other manufacture's. Furthermore where a short circuit has occurred, replace those components that indicate evidence of overheating.
5. Before returning a serviced set to the customer, the service technician must thoroughly test the unit to be certain that it is completely safe to operate without danger of electrical shock, and be sure that no protective device built into the set by the manufacture has become defective, or inadvertently defeated during servicing. Therefore, the following checks should be performed for the continued protection of the customer and servicetechnician.
6. Perform the following precautions against unwanted radiation and rise in internal temperature.
   - Always return the internal wiring to the original styling.
   - Attach parts (Gascket, Ferrite Core, Ground, Rear Cover, Shield Case etc.) surely after disassembly.
7. Perform the following precautions for the PDP panel.
   - When the front case is removed, make sure nothing hits the panel face, panel corner, and panel edge (so that the glass does not break).
   - Make sure that the panel vent does not break. (Check that the cover is attached.)
   - Handle the FPC connected to the panel carefully. Twisting or pulling the FPC when connecting it to the connector will cause it to peel off from the panel.
8. Pay attention to the following.
   - Pay extreme caution when the front case and rear panel are removed because this may cause a high risk of disturbance to TVs and radios in the surrounding.

Leakage Current Cold Check

With the AC plug removed from an AC power source, place a jumper across the two plug prongs. Turn the AC power switch on. Using an insulation tester (DC 500V), connect one lead to the jumpered AC plug and touch the other lead to each exposed metal part (input/output terminals, screwheads, metal overlays, control shafts, etc.), particularly any exposed metal part having a return path to the chassis. Exposed metal parts having a return path to the chassis should have a minimum resistor reading of 0.3MΩ and a maximum resistor reading of 5MΩ. Any resistor value below or above this range indicates an abnormality which requires corrective action. Exposed metal parts not having a return path to the chassis will indicate an open circuit.

Leakage Current Hot Check

Plug the AC line cord directly into an AC power source (do not use an isolation transformer for this check).
Turn the AC power switch on.
Using a "Leakage Current Tester (Simpson Model 229 equivalent)", measure for current from all exposed metal parts of the cabinet (input/output terminals, screwheads, metal overlays, control shaft, etc.), particularly any exposed metal part having a return path to the chassis, to a known earth ground (water pipe, conduit, etc.). Any current measured must not exceed 0.5mA.

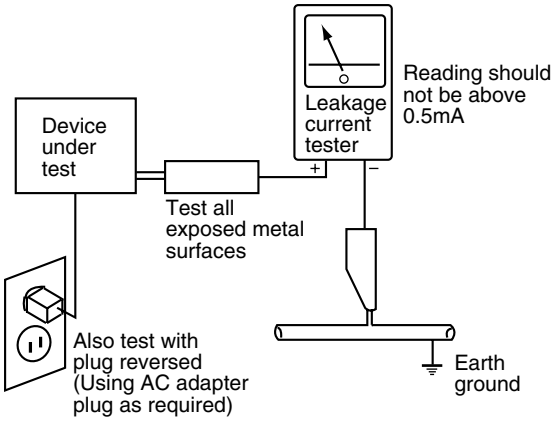

AC Leakage Test

ANY MEASUREMENTS NOT WITHIN THE LIMITS OUTLINED ABOVE ARE INDICATIVE OF A POTENTIAL SHOCK HAZARD AND MUST BE CORRECTED BEFORE RETURNING THE SET TO THE CUSTOMER.

PRODUCT SAFETY NOTICE

Many electrical and mechanical parts in PIONEER set have special safety related characteristics. These are often not evident from visual inspection nor the protection afforded by them necessarily can be obtained by using replacement components rated for higher voltage, wattage, etc. Replacement parts which have these special safety characteristics are identified in this Service Manual.
Electrical components having such features are identified by marking with a ⚠ on the schematics and on the parts list in this Service Manual.
The use of a substitute replacement component which dose not have the same safety characteristics as the PIONEER recommended replacement one, shown in the parts list in this Service Manual, may create shock, fire or other hazards.
Product Safety is continuously under review and new instructions are issued from time to time. For the latest information, always consult the current PIONEER Service Manual. A subscription to, or additional copies of, PIONEER Service Manual may be obtained at a nominal charge from PIONEER.

■ Charged Section

The places where the commercial AC power is used without passing through the power supply transformer.
If the places are touched, there is a risk of electric shock. In addition, the measuring equipment can be damaged if it is connected to the GND of the charged section and the GND of the non-charged section while connecting the set directly to the commercial AC power supply. Therefore, be sure to connect the set via an insulated transformer and supply the current.

1. Power Cord
2. AC Inlet
3. Power Switch (S1)
4. Fuse (In the POWER SUPPLY Unit)
5. STB Transformer and Converter Transformer (In the POWER SUPPLY Unit)
6. Other primary side of the POWER SUPPLY Unit

■ High Voltage Generating Point

The places where voltage is 100V or more except for the charged places described above. If the places are touched, there is a risk of electric shock.

If the procedures described in "7.1.5 POWER ON/OFF FUNCTION FOR THE LARGE-SIGNAL SYSTEM" are performed before the power is turned off, the voltage will be discharged in about 30 seconds.

1. POWER SUPPLY Unit.....(205V)
2. 50 X DRIVE Assy ..... (–180V to 205V)
3. 50 Y DRIVE Assy ..... (500V)
4. 50 SCAN A Assy ..... (500V)
5. 50 SCAN B Assy ..... (500V)
6. SUS CLAMP 1 Assy .....(–180V to 205V)
7. SUS CLAMP 2 Assy .....(–180V to 205V)

: Part is Charged Section.
: Part is the High Voltage Generating Points other than the Charged Section.

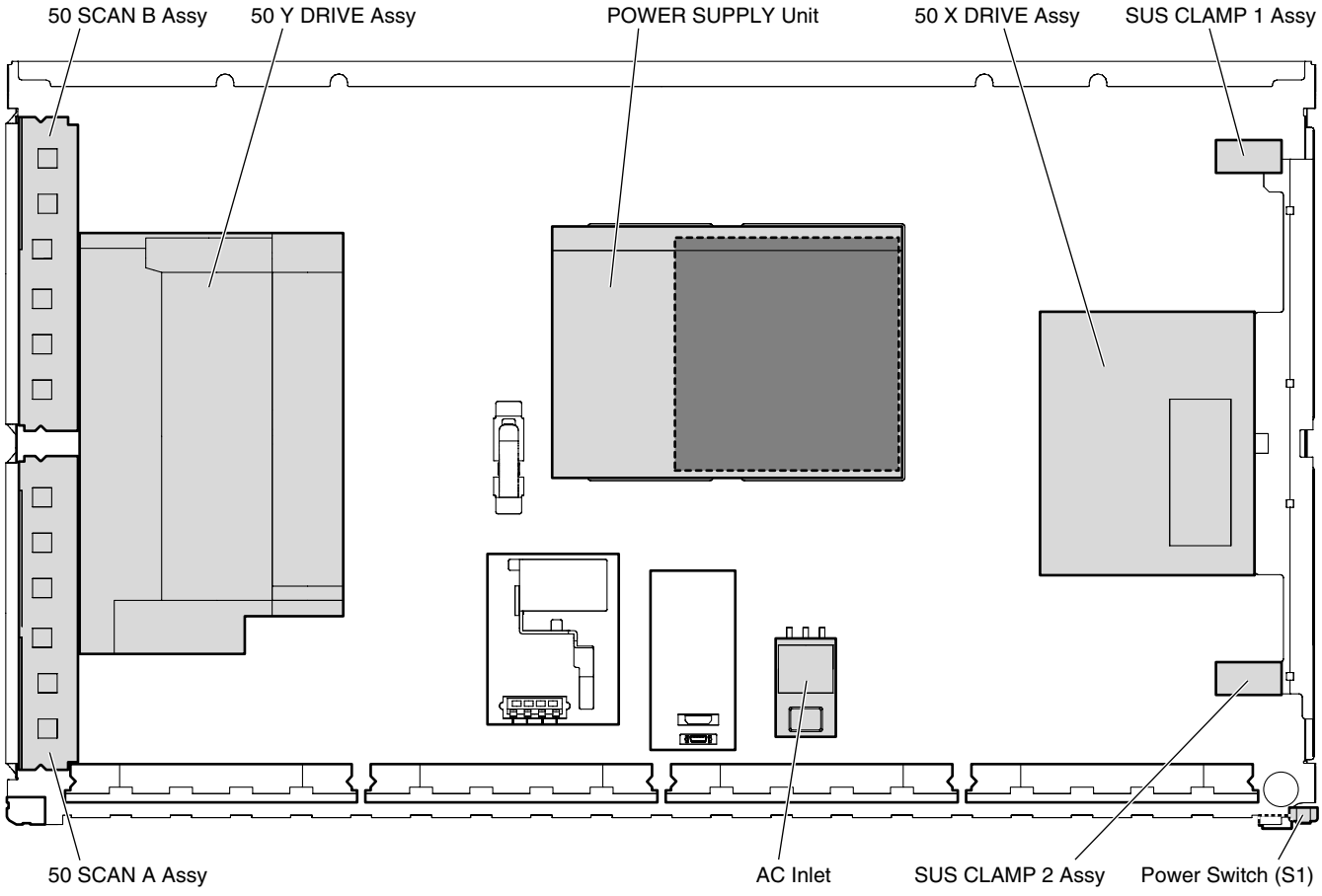

Fig.1 Charged Section and High Voltage Generating Point (Rear View)

[Important Check Points for Good Servicing]

In this manual, procedures that must be performed during repairs are marked with the below symbol.
Please be sure to confirm and follow these procedures.

1. Product safety

Please conform to product regulations (such as safety and radiation regulations), and maintain a safe servicing environment by following the safety instructions described in this manual.

① Use specified parts for repair.

Use genuine parts. Be sure to use important parts for safety.

② Do not perform modifications without proper instructions.

Please follow the specified safety methods when modification(addition/change of parts) is required due to interferences such as radio/TV interference and foreign noise.

③ Make sure the soldering of repaired locations is properly performed.

When you solder while repairing, please be sure that there are no cold solder and other debris.
Soldering should be finished with the proper quantity. (Refer to the example)

④ Make sure the screws are tightly fastened.

Please be sure that all screws are fastened, and that there are no loose screws.

⑤ Make sure each connectors are correctly inserted.

Please be sure that all connectors are inserted, and that there are no imperfect insertion.

⑥ Make sure the wiring cables are set to their original state.

Please replace the wiring and cables to the original state after repairs.
In addition, be sure that there are no pinched wires, etc.

⑦ Make sure screws and soldering scraps do not remain inside the product.

Please check that neither solder debris nor screws remain inside the product.

⑧ There should be no semi-broken wires, scratches, melting, etc. on the coating of the power cord.

Damaged power cords may lead to fire accidents, so please be sure that there are no damages.
If you find a damaged power cord, please exchange it with a suitable one.

⑨ There should be no spark traces or similar marks on the power plug.

When spark traces or similar marks are found on the power supply plug, please check the connection and advise on secure connections and suitable usage. Please exchange the power cord if necessary.

⑩ Safe environment should be secured during servicing.

When you perform repairs, please pay attention to static electricity, furniture, household articles, etc. in order to prevent injuries.
Please pay attention to your surroundings and repair safely.

2. Adjustments

To keep the original performance of the products, optimum adjustments and confirmation of characteristics within specification.
Adjustments should be performed in accordance with the procedures/instructions described in this manual.

3. Lubricants, Glues, and Replacement parts

Use grease and adhesives that are equal to the specified substance.
Make sure the proper amount is applied.

4. Cleaning

For parts that require cleaning, such as optical pickups, tape deck heads, lenses and mirrors used in projection monitors, proper cleaning should be performed to restore their performances.

5. Shipping mode and Shipping screws

To protect products from damages or failures during transit, the shipping mode should be set or the shipping screws should be installed before shipment. Please be sure to follow this method especially if it is specified in this manual.

CONTENTS

1. SPECIFICATIONS 7
2. EXPLODED VIEWS AND PARTS LIST 8
2.1 PACKING SECTION 8
2.2 REAR SECTION 10
2.3 FRONT SECTION 12
2.4 CHASSIS SECTION (1/2) 14
2.5 CHASSIS SECTION (2/2) 16
2.6 PDP SERVICE ASSY 506P (AWU1134) 18
3. BLOCK DIAGRAM AND SCHEMATIC DIAGRAM 20
3.1 OVERALL CONNECTION DIAGRAM 20
3.2 OVERALL BLOCK DIAGRAM 22
3.3 50 ADDRESS ASSY 24
3.4 50 SCAN A and B ASSYS 25
3.5 50 X DRIVE, SUS CLAMP 1 and SUS CLAMP 2 ASSYS 26
3.6 50 Y DRIVE ASSY 27
3.7 HD DIGITAL ASSY 28
3.8 HD AUDIO ASSY 29
3.9 POWER SUPPLY UNIT 30
3.10 WAVEFORMS 31
5. PCB PARTS LIST 33
6. ADJUSTMENT 41
6.1 ADJUSTMENT REQUIRED WHEN THE SET IS REPAIRED OR REPLACED 41
6.2 RS-232C COMMAND 42
6.3 METHOD FOR REPLACING THE SERVICE PANEL ASSY 58
7. GENERAL INFORMATION 62
7.1 DIAGNOSIS 62
7.1.1 PCB LOCATION 62
7.1.2 DIAGNOSIS OF SHUTDOWN/POWER-DOWN INDICATED BY LEDS 63
7.1.3 OVERVIEW OF PANEL FACTORY MODE 66
7.1.4 OPERATION WHEN THE MEDIA RECEIVER IS NOT CONNECTED 75
7.1.5 POWER ON/OFF FUNCTION FOR THE LARGE-SIGNAL SYSTEM 76
7.1.6 BACKUP WHEN THE MAIN UNIT IS ADJUSTED 77
7.1.7 HOW TO CLEAR HISTORY DATA 79
7.1.8 DISASSEMBLY 81
7.2 IC 85
8. PANEL FACILITIES 94

1. SPECIFICATIONS

Item	50" Plasma Display, Model: PDP-506PE	50" Plasma Display, Model: PDP-506PU
Number of Pixels	1280 × 768 pixels	1280 × 768 pixels
Audio Amplifier	13 W + 13 W (1 kHz, 10 %, 8Ω)	13 W + 13 W (1 kHz, 10 %, 8Ω)
Surround System	SRS/FOCUS/TruBass	SRS/FOCUS/TruBass
Power Requirement	220 - 240 V AC, 50/60 Hz, 344 W (0.4 W Standby)	120 V AC, 60 Hz, 355 W (0.2 W Standby)
Dimensions	1224 (W) × 717 (H) × 92 (D) mm	1224 (W) × 717 (H) × 92 (D) mm (48 3/16 (W) × 28 1/4 (H) × 3 5/8 (D) inches)
Weight	31.8 kg (70.1 lbs.)	31.8 kg (70.1 lbs.)

• Design and specifications are subject to change without notice.

Trademarks

• FOCUS, WOW, SRS and **(●)**® symbol are trademarks of SRS Labs, Inc.
FOCUS and SRS technologies are incorporated under license from SRS Labs, Inc.
• This product includes FontAvenue® fonts licensed by NEC Corporation.
FontAvenue is a registered trademark of NEC Corporation.
• HDMI, the HDMI logo and High-Definition Multimedia Interface are trademarks or registered trademarks of HDMI Licensing LLC.
• The names of companies or institutions are trademarks or registered trademarks of the respective companies or institutions.

Accessories

Power cord (2 m)

For PDP-506PE

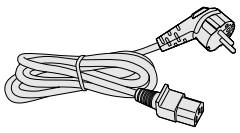

(ADG1214)

For PDP-506PU

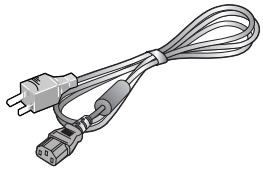

(ADG1215)

Only the power cord that is appropriate in your country or region is supplied.

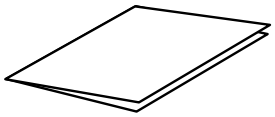

Warranty card

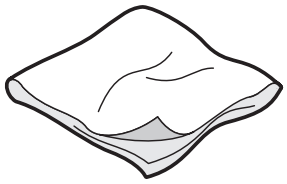

Cleaning cloth
(AED1285)

Binder Assy (AEC1908)

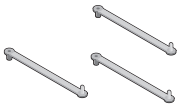

Speed clamp x 3

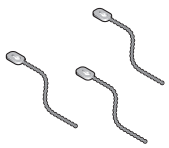

Bead band x 3

Ferrite Core (ATX1039)(PDP-506PE only)

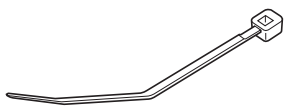

Cable tie

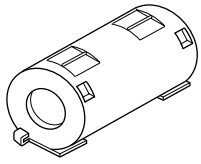

Ferrite core

2. EXPLODED VIEWS AND PARTS LIST

NOTES:
- *Parts marked by "NSP" are generally unavailable because they are not in our Master Spare Parts List.*
- *The ⚠ mark found on some component parts indicates the importance of the safety factor of the part. Therefore, when replacing, be sure to use parts of identical designation.*
- *Screws adjacent to ▼ mark on product are used for disassembly.*
- *For the applying amount of lubricants or glue, follow the instructions in this manual. (In the case of no amount instructions, apply as you think it appropriate.)*

2.1 PACKING SECTION

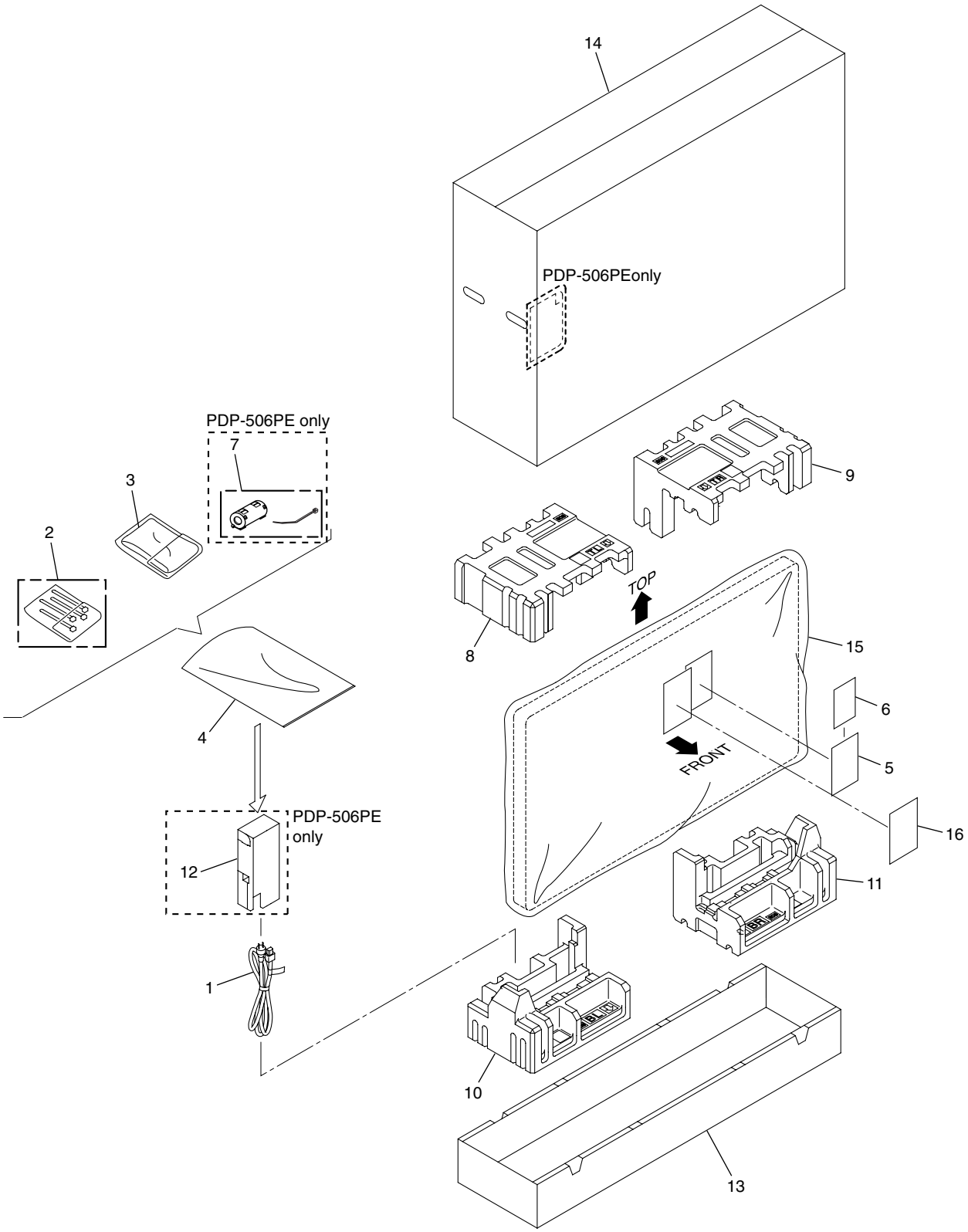

(1) PACKING SECTION PARTS LIST

Mark	No.	Description	Part No.
⚠	1	Power Cord	See Contrast table (2)
	2	Binder Assy	AEC1908
	3	Cleaning Cloth	AED1285
	4	Polyethylene Bag S	See Contrast table (2)
NSP	5	Catalogue Bag	See Contrast table (2)
NSP	6	Warranty card	See Contrast table (2)
⚠	7	Ferrite Core	See Contrast table (2)
	8	Pad (50T-L)	See Contrast table (2)
	9	Pad (50T-R)	See Contrast table (2)
	10	Pad (50B-L)	See Contrast table (2)
	11	Pad (50B-R)	See Contrast table (2)
	12	Power Cord Case	See Contrast table (2)
	13	Under Carton	See Contrast table (2)
	14	Upper Carton	See Contrast table (2)
	15	Mirror Mat	See Contrast table (2)
	16	Caution Card	See Contrast table (2)

(2) CONTRAST TABLE

PDP-506PE/WYVI and PDP-506PU/KUCXC are constructed the same except for the following:

Mark	No.	Symbol and Description	PDP-506PE/WYVI	PDP-506PU/KUCXC
⚠	1	Power Cord	ADG1214	ADG1215
	4	Polyethylene Bag S	AHG1338	AHG1348
NSP	5	Catalogue Bag	AHG1340	AHG1347
NSP	6	Warranty Card	ARY1114	ARY1145
⚠	7	Ferrite Core	ATX1039	Not used
	8	Pad (50T-L)	AHA2427	AHA2459
	9	Pad (50T-R)	AHA2428	AHA2460
	10	Pad (50B-L)	AHA2429	AHA2461
	11	Pad (50B-R)	AHA2430	AHA2462
	12	Power Cord Case	AHC1073	Not used
	13	Under Carton (50)	AHD3344	Not used
	13	Under Carton (506PU)	Not used	AHD3379
	14	Upper Carton (506PE)	AHD3345	Not used
	14	Upper Carton (506PU)	Not used	AHD3383
	15	Mirror Mat	AHG1284	AHG1352
	16	Caution Card	ARM1232	ARM1239

2.2 REAR SECTION

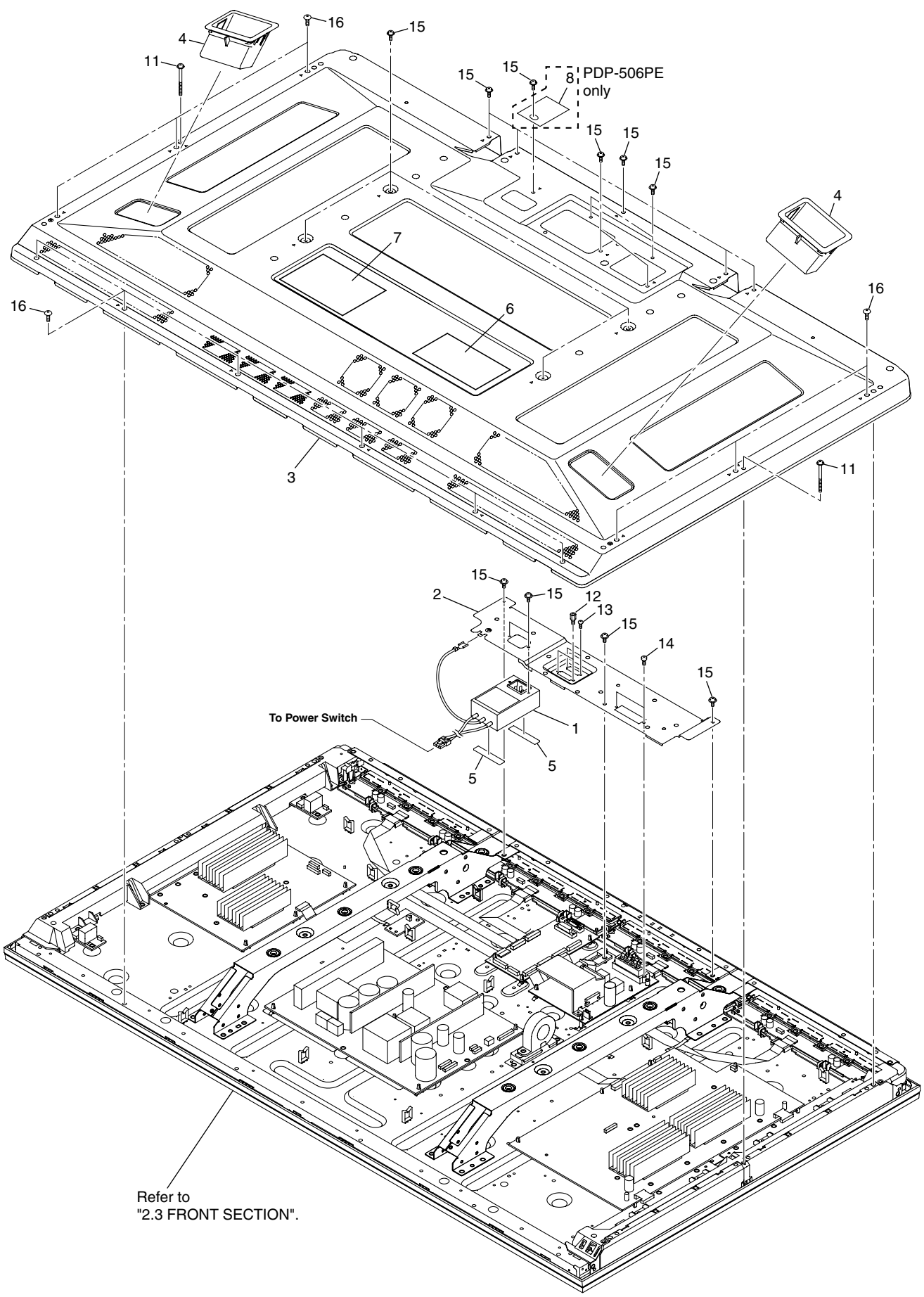

(1) REAR SECTION PARTS LIST

Mark	No.	Description	Part No.
⚠	1	AC Inlet	AKP1274
	2	Control Plate	AND1185
	3	Rear Case (506)	ANE1639
	4	Inner Grip Assy	AMR3434
	5	AC Cushion	AEC2035
NSP	6	Model Label	See Contrast table (2)
	7	Caution Label	See Contrast table (2)
	8	AC Label PE	See Contrast table (2)
	9	•••••	
	10	•••••	
	11	Screw (3 x 40P)	ABA1332
	12	Hexagon Head Screw	BBA1051
	13	Screw	PMZ26P060FTB
	14	Screw	BPZ30P080FTB
	15	Screw	AMZ30P060FTB
	16	Screw	TBZ40P080FTB

(2) CONTRAST TABLE

PDP-506PE/WYVI and PDP-506PU/KUCXC are constructed the same except for the following:

Mark	No.	Symbol and Description	PDP-506PE/WYVI	PDP-506PU/KUCXC
NSP	6	Model Label (506PE)	AAL2661	Not used
NSP	6	Model Label (506PU)	Not used	AAL2679
	7	Caution Label	AAX3117	AAX3075
	8	AC Label PE	AAX3194	Not used

2.3 FRONT SECTION

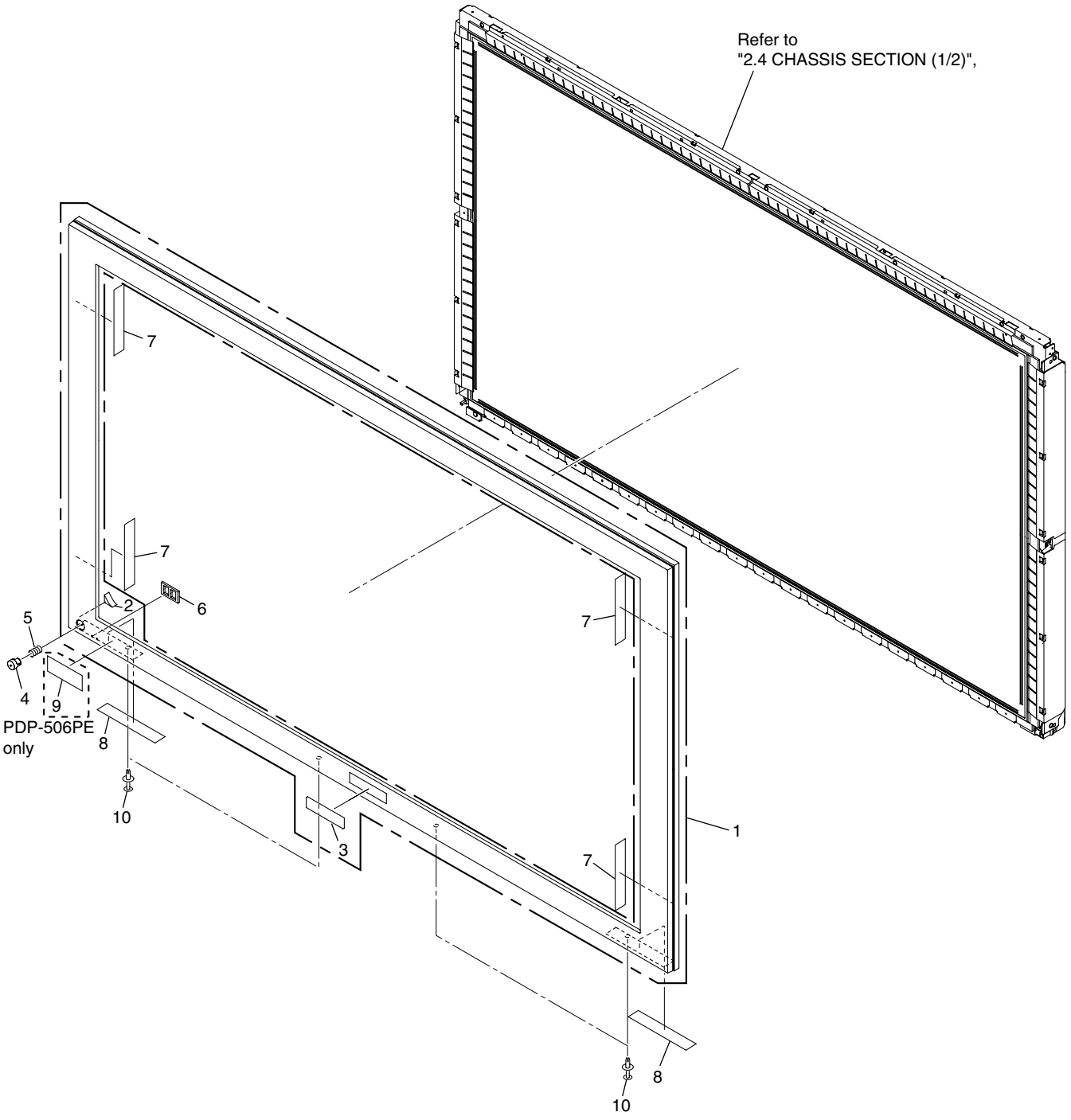

(1) FRONT SECTION PARTS LIST

Mark	No.	Description	Part No.
	1	Front Case Assy (506PE)	AMB2861
	2	Corner Cushion	AEB1416
	3	Pioneer Name Plate	AAM1098
	4	Power Button	AAD4133
	5	Coil Spring	ABH1120
	6	Blind Cushion	AEB1415
	7	Insulation Sheet A	AED1283
	8	Insulation Sheet B	AED1284
	9	Power Display Label (506)	See Contrast table (2)
	10	Screw Rivet	AEC1877

(2) CONTRAST TABLE

PDP-506PE/WYVI and PDP-506PU/KUCXC are constructed the same except for the following:

Mark	No.	Symbol and Description	PDP-506PE/WYVI	PDP-506PU/KUCXC
	9	Power Display Label (506)	AAX3217	Not used

2.4 CHASSIS SECTION (1/2)

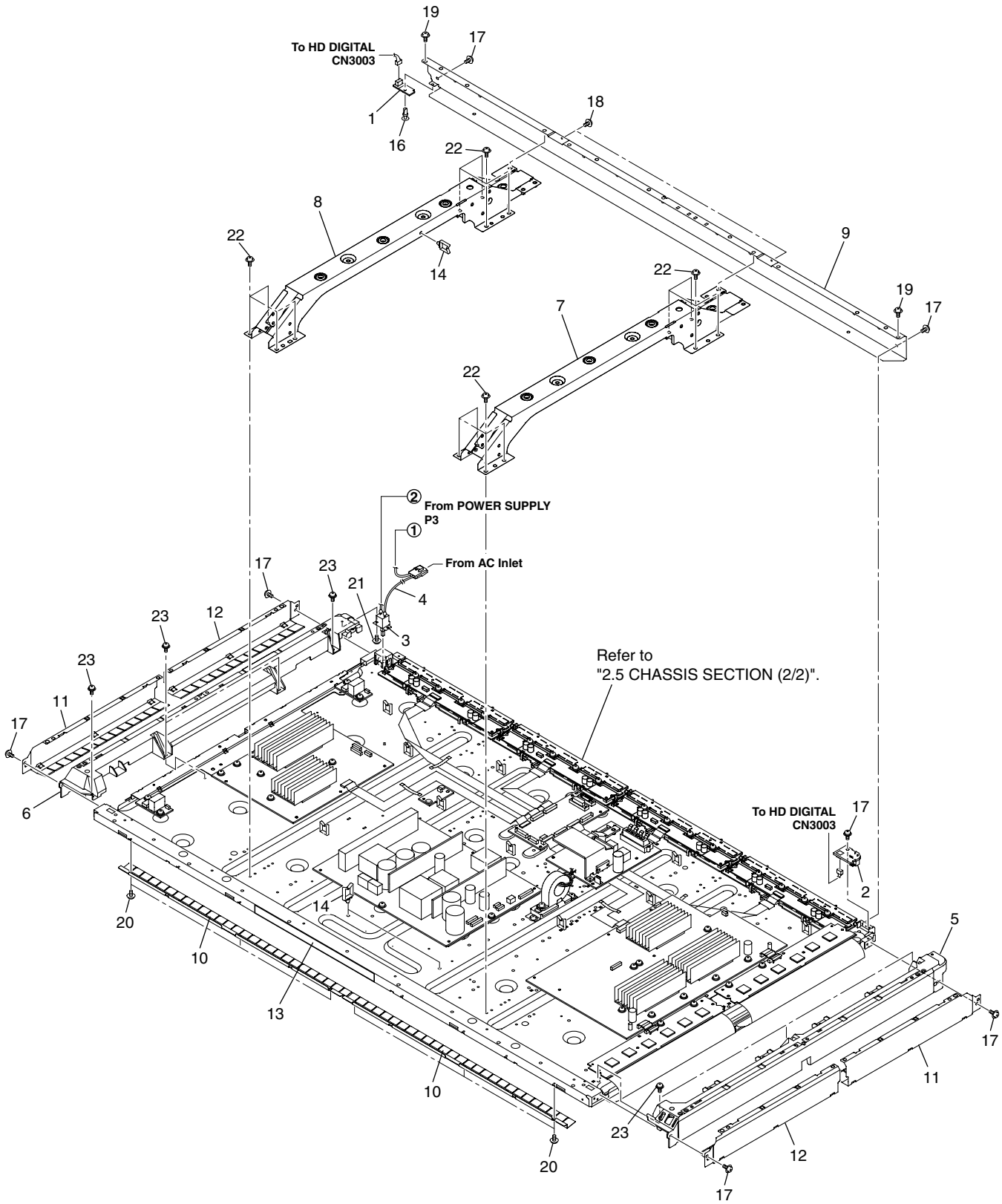

CHASSIS SECTION (1/2) PARTS LIST

Mark	No.	Description	Part No.
	1	HD LED Assy	AWW1029
	2	HD IR Assy	AWW1030
⚠	3	Power Switch (S1)	ASG1092
	4	Housing Wire (50)(J103)	ADX3112
	5	Front Chassis VL (50)	AMA1014
	6	Front Chassis VR (50)	AMA1015
	7	Sub Frame L Assy (506)	ANA1860
	8	Sub Frame R Assy (506)	ANA1861
	9	Front Chassis H Assy (50)	ANA1883
	10	Panel Holder H (50)	ANG2769
	11	Panel Holder V1 (50)	ANG2770
	12	Panel Holder V2 (50)	ANG2771
	13	Cushion	AEB1424
	14	Wire Saddle	AEC1745
	15	•••••	
	16	Nyron Rivet	AEC1671
	17	Screw	ABZ30P080FTC
	18	Screw	AMZ30P060FTB
	19	Screw	APZ30P080FTB
	20	Screw	BBZ30P060FTC
	21	Screw	BPZ30P080FTB
	22	Screw	TBZ40P080FTB
	23	Screw	VBB30P080FNI

2.5 CHASSIS SECTION (2/2)

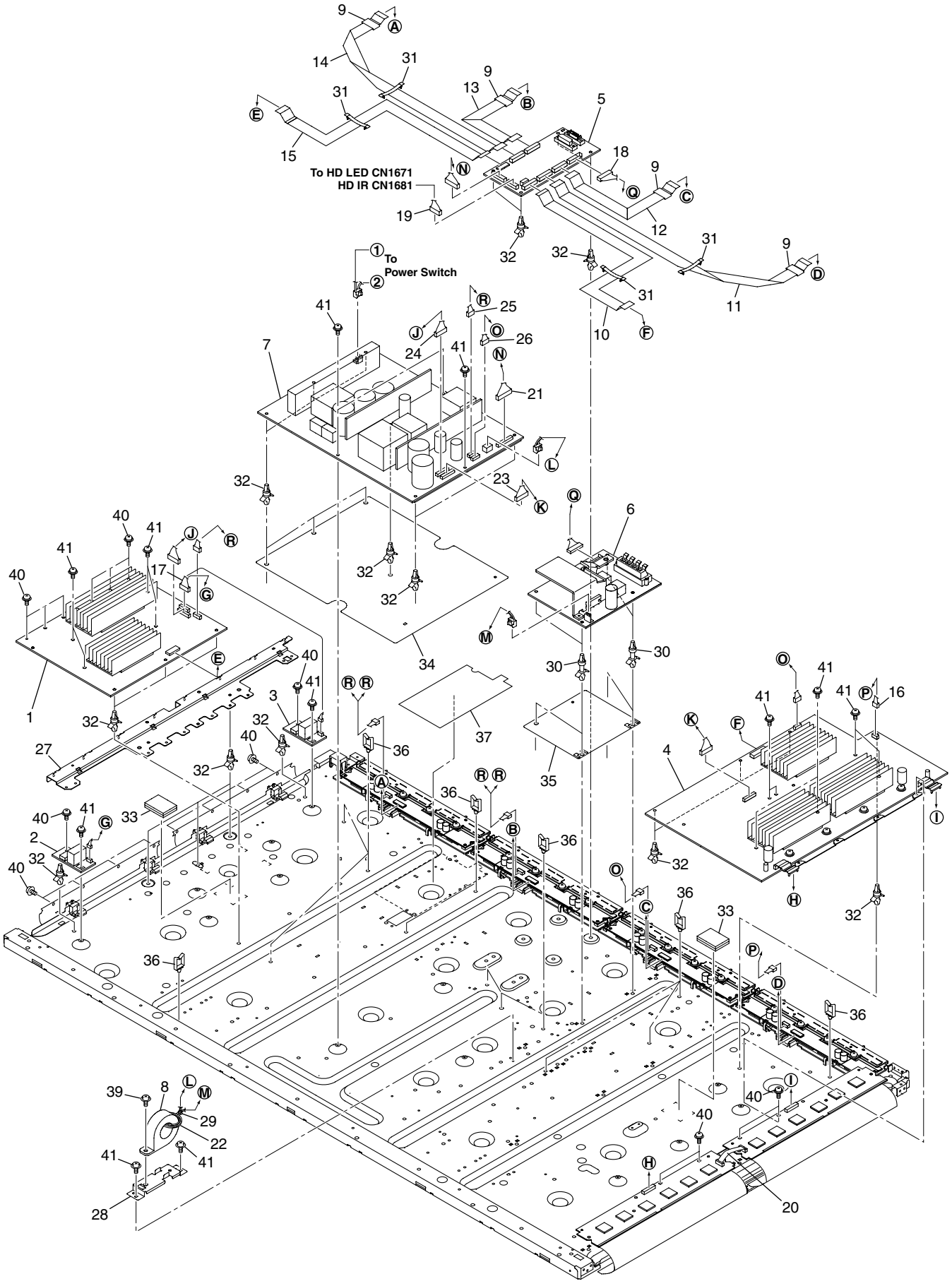

(1) CHASSIS SECTION (2/2) PARTS LIST

Mark	No.	Description	Part No.
	1	50 X DRIVE Assy	See Contrast table (2)
	2	SUS CLAMP 1 Assy	AWW1022
	3	SUS CLAMP 2 Assy	AWW1023
	4	50 Y DRIVE Assy	See Contrast table (2)
	5	HD DIGITAL Assy	AWW1028
	6	HD AUDIO Assy	AWV2203
⚠	7	POWER SUPPLY Unit	AXY1112
	8	Ring Core with Case	ATX1042
	9	Ferrite Core	ATX1048
	10	Flexible Cable (J201)	ADD1293
	11	Flexible Cable (J202)	ADD1294
	12	Flexible Cable (J203)	ADD1295
	13	Flexible Cable (J204)	ADD1296
	14	Flexible Cable (J205)	ADD1297
	15	Flexible Cable (J206)	ADD1298
	16	4P Housing Wire (J108)	ADX3117
	17	6P Housing Wire (J109)	See Contrast table (2)
	18	12P Housing Wire (J110)	See Contrast table (2)
	19	6P Housing Wire (J111)	ADX3120
	20	3P Housing Wire (J113)	See Contrast table (2)
	21	14P Housing Wire (J104)	ADX3158
	22	3P Housing Wire (J105)	ADX3159
	23	9P Housing Wire (J101)	ADX3186
	24	8P Housing Wire (J102)	ADX3187
	25	5P Housing Wire (J106)	ADX3188
	26	6P Housing Wire (J107)	ADX3189
	27	Conductive Plate XA	ANG2776
	28	FC Stay	ANG2815
	29	Binder	AEC-093
NSP	30	PCB Spacer	AEC1188
	31	Flat Clamp	AEC1879
	32	PCB Spacer	AEC1941
	33	Drive Silicone Sheet	AEH1095
	34	Power Supply Insulation Sheet	AMR3447
	35	Audio Insulation Sheet	AMR3469
	36	Wire Saddle	AEC1745
NSP	37	Address Sheet	AMR3491
	38	•••••	
	39	Screw	ABA1324
	40	Screw	PMB30P060FTC
	41	Screw	VBB30P080FNI

(2) CONTRAST TABLE

PDP-506PE/WYVI and PDP-506PU/KUCXC are constructed the same except for the following:

Mark	No.	Symbol and Description	PDP-506PE/WYVI	PDP-506PU/KUCXC
	1	50 X DRIVE Assy	AWW1075	AWW1020 or AWW1075
	4	50 Y DRIVE Assy	AWV2258	AWV2210 or AWV2258
	17	6P Housing Wire (J109)	ADX3118	ADX3132
	18	12P Housing Wire (J110)	ADX3119	ADX3133
	20	3P Housing Wire (J113)	ADX3122	ADX3136

2.6 PDP SERVICE ASSY 506P (AWU1134)

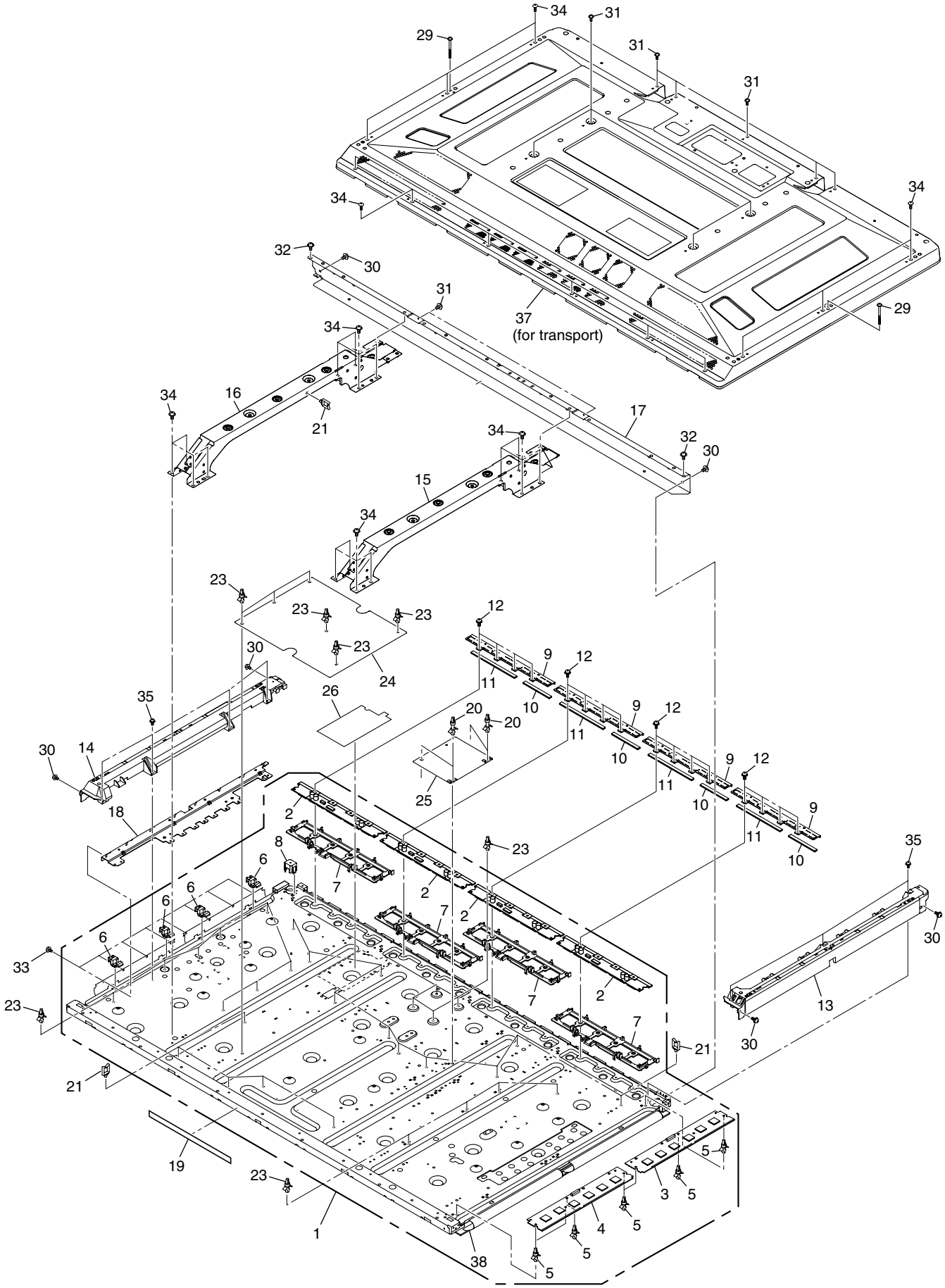

• **Front Section**

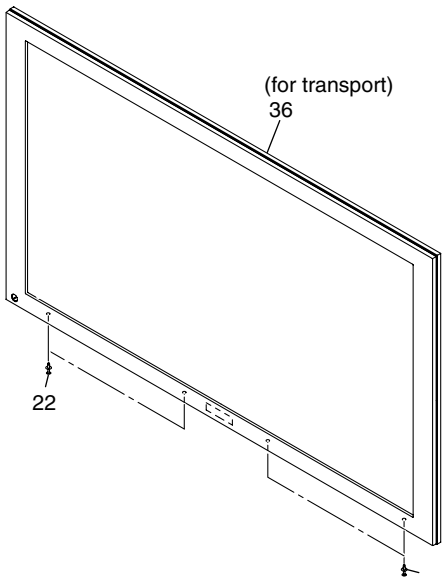

• **Packing Section**

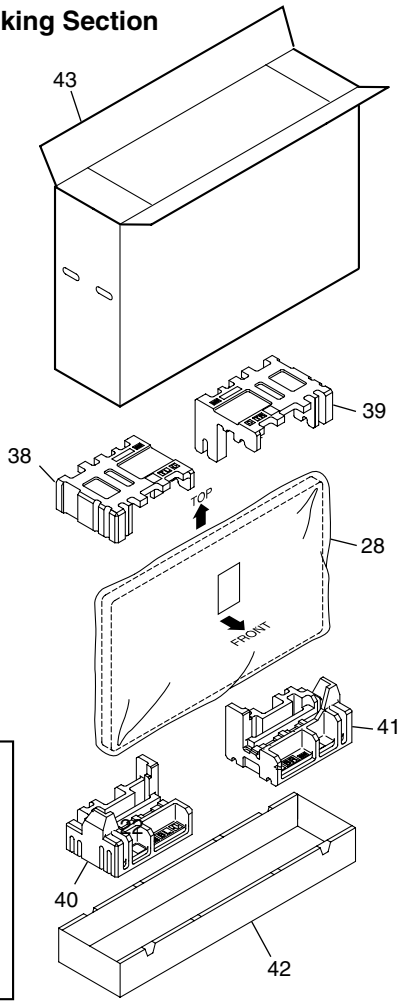

Note when replacing with the PDP Service Assy 506P

The Power Switch (S1), HD LED Assy, and HD IR Assy are not included in the PDP Service Assy 506P. Before replacement with the PDP Service Assy 506P, the following components of the Service Assy must be temporarily detached to attach the above-mentioned parts (parts from the original unit or newly purchased):
- Front Chassis H Assy (50) (ANA1883)
- Front Chassis VL (50) (AMA1014)
- Front Chassis VR (50) (AMA1015)

PDP SERVICE ASSY 506P (AWU1134) PARTS LIST

Mark	No.	Description	Part No.
NSP	1	Panel Chassis (506) Assy	AWU1143
NSP	2	50 ADDRESS Assy	AWV2208
NSP	3	50 SCAN A Assy	AWW1026
NSP	4	50 SCAN B Assy	AWW1027
	5	PCB Spacer	AEC1944
	6	Conductive Plate Holder	AMR3446
	7	ADDRESS Holder Assy (50)	AMR3454
	8	Tube Cover	AMR3445
	9	Address Heatsink (50)	ANH1635
	10	Address Silicone A	AEH1093
	11	Address Silicone B	AEH1094
	12	Screw	BBB30P120FNI
	13	Front Chassis VL (50)	AMA1014
	14	Front Chassis VR (50)	AMA1015
	15	Sub Frame L Assy (506)	ANA1860
	16	Sub Frame R Assy (506)	ANA1861
	17	Front Chassis H Assy (50)	ANA1883
	18	Conductive Plate XA	ANG2776
	19	Cushion	AEB1424
NSP	20	PCB Spacer	AEC1188
	21	Wire Saddle	AEC1745
	22	Screw Rivet	AEC1877
	23	PCB Spacer	AEC1941
	24	Power Supply Insulation Sheet	AMR3447
	25	Audio Insulation Sheet	AMR3469
NSP	26	Address Sheet	AMR3491
NSP	27	Chassis Assy (50)	ANA1830
	28	Protect Sheet	AHG1331
	29	Screw (3 x 40P)	ABA1332
	30	Screw	ABZ30P080FTC
	31	Screw	AMZ30P060FTB
	32	Screw	APZ30P080FTB
	33	Screw	PMB30P060FTC
	34	Screw	TBZ40P080FTB
	35	Screw	VBB30P080FNI
NSP	36	Front Case Assy (506 serivice) (for transport)	AMB2889
NSP	37	Rear Case (506) (for transport)	ANE1639
	38	Pad (50T-L)	AHA2427
	39	Pad (50T-R)	AHA2428
	40	Pad (50B-L)	AHA2429
	41	Pad (50B-R)	AHA2430
	42	Under Carton	AHA3344
	43	Upper Carton (506 S.V.C)	AHA3430

3. BLOCK DIAGRAM AND SCHEMATIC DIAGRAM

3.1 OVERALL CONNECTION DIAGRAM

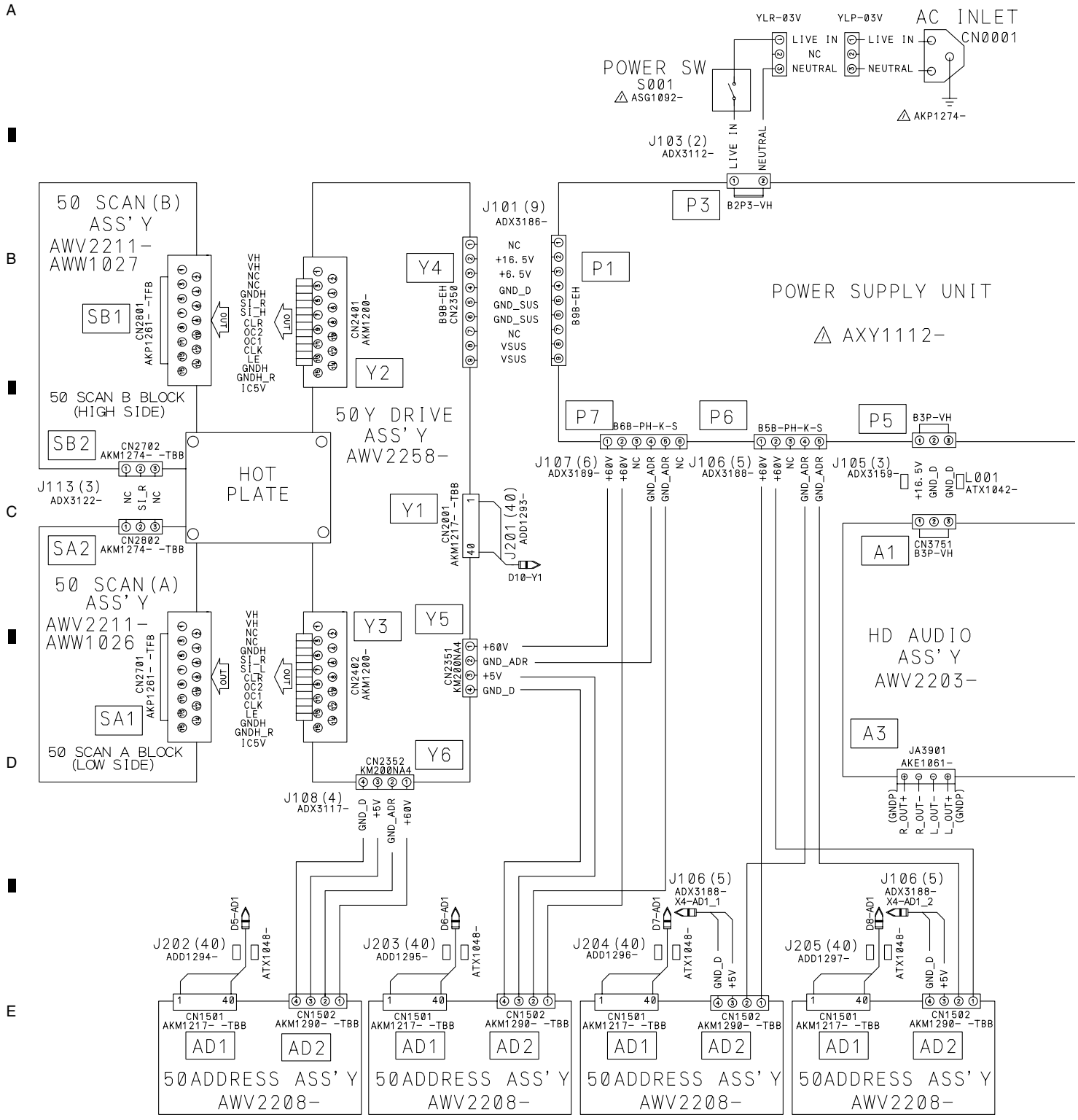

- When ordering service parts, be sure to refer to "EXPLODED VIEWS and PARTS LIST" or "PCB PARTS LIST".
- The ⚠ mark found on some component parts indicates the importance of the safety factor of the part. Therefore, when replacing, be sure to use parts of identical designation.

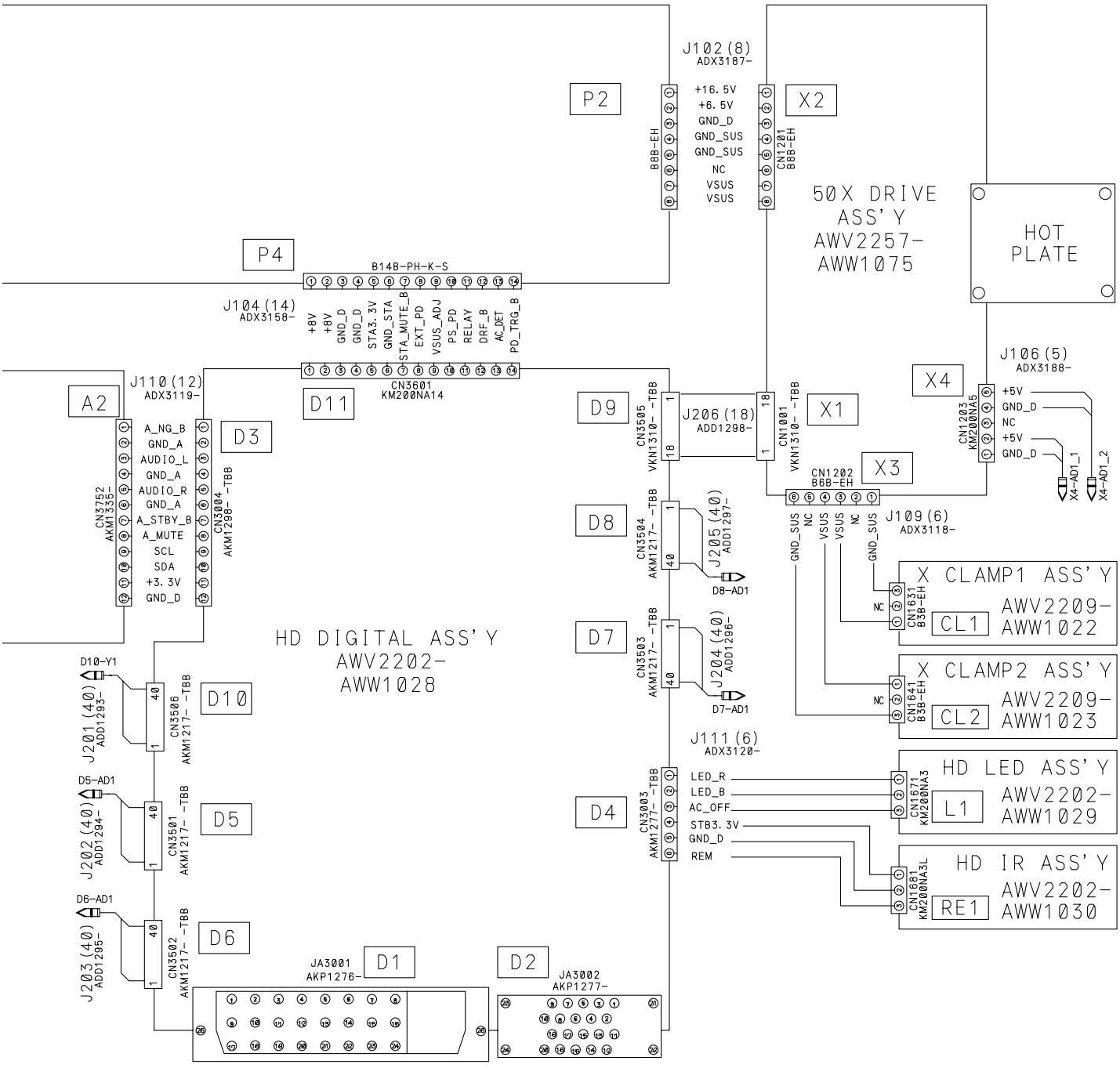

3.2 OVERALL BLOCK DIAGRAM

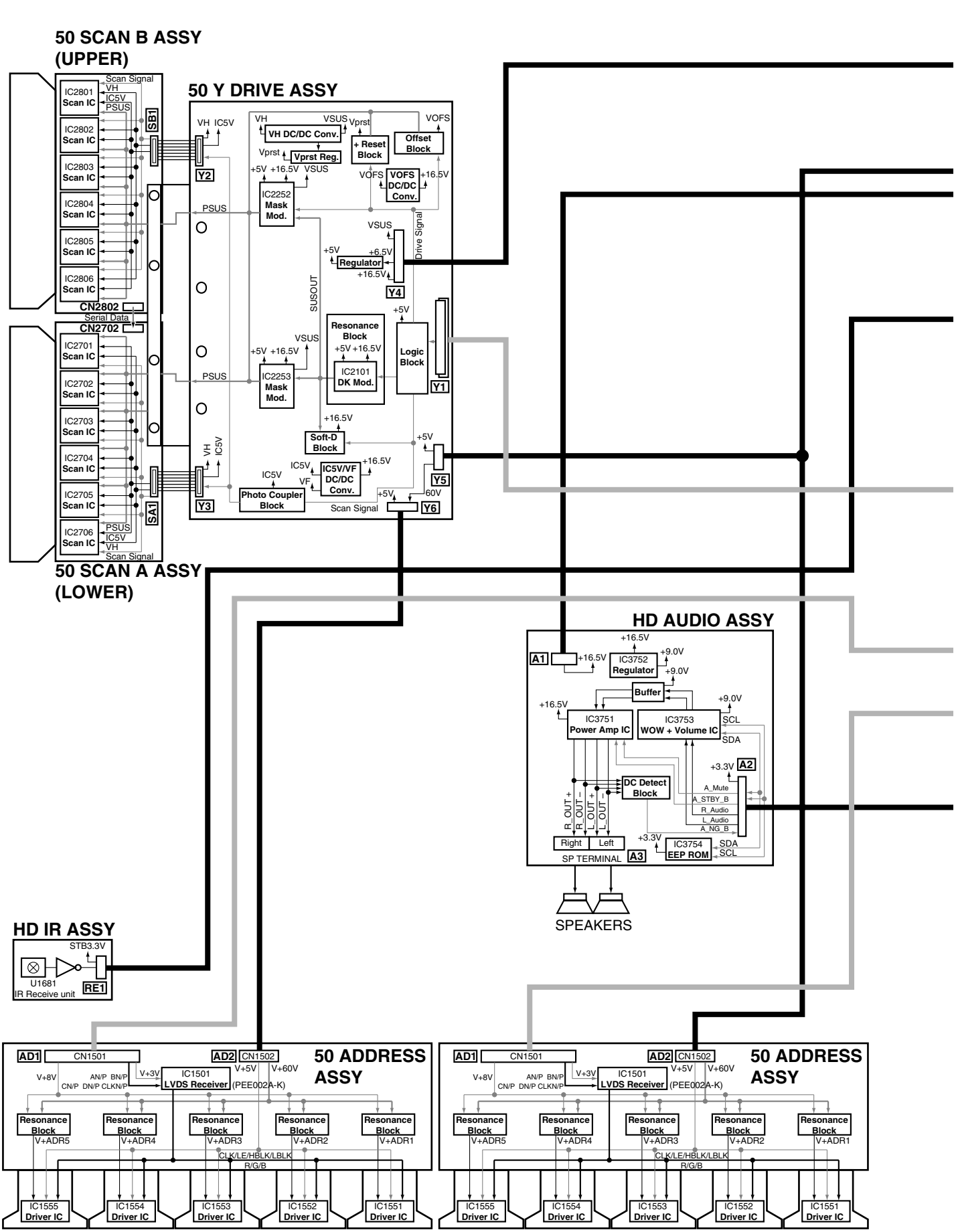

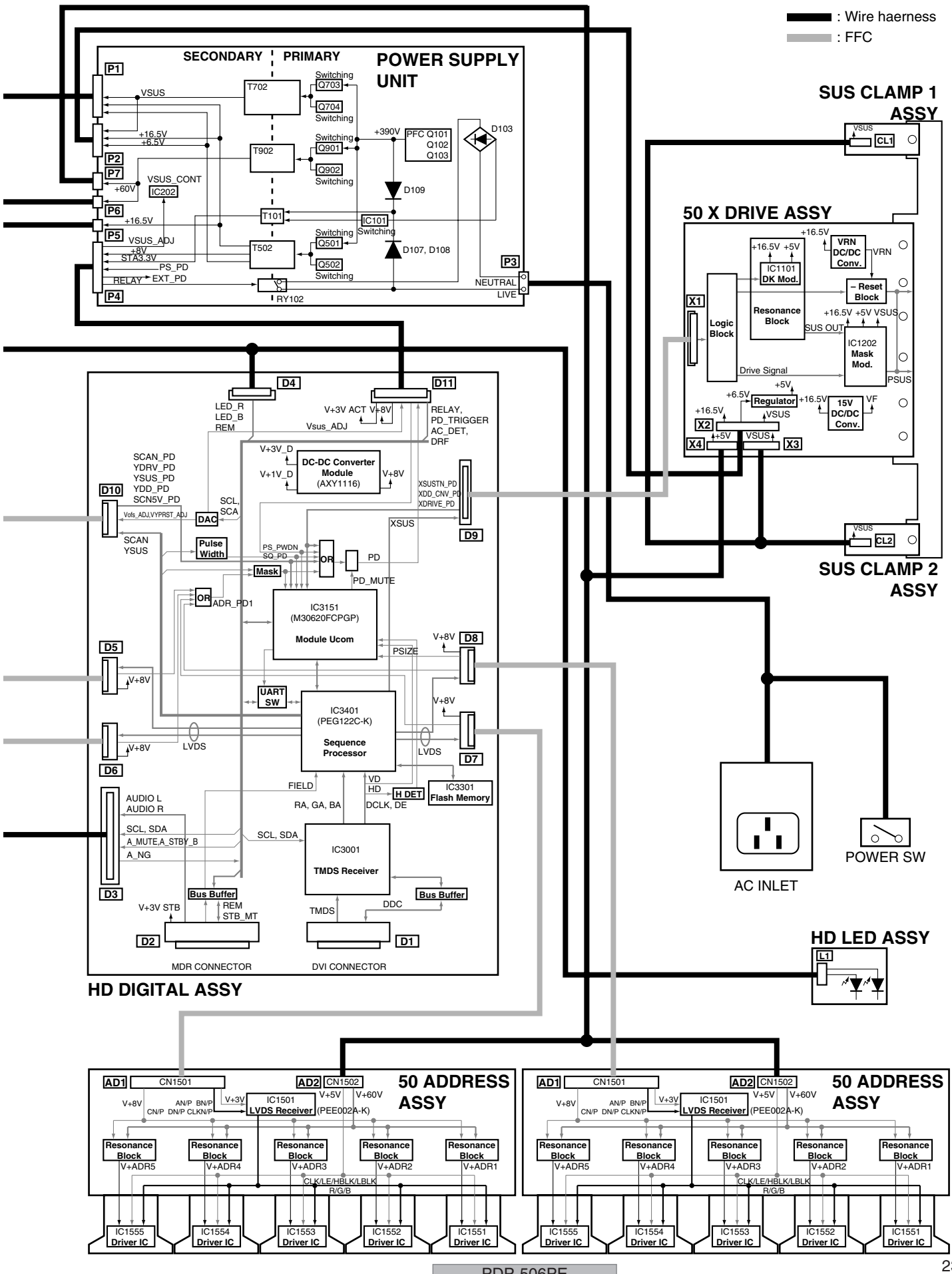

: Wire haerness
: FFC
SECONDARY
PRIMARY
POWER SUPPLY UNIT
P1
P2
P7
P6
P5
P4
P3
VSUS
+16.5V
+6.5V
+60V
VSUS_CONT
IC202
VSUS_ADJ
+8V
STA3.3V
PS_PD
RELAY
EXT_PD
T702
T902
T101
T502
Switching
Q703
Q704
Q901
Q902
Q501
Q502
+390V
PFC Q101
Q102
Q103
D103
D109
IC101
D107, D108
RY102
NEUTRAL
LIVE
SUS CLAMP 1 ASSY
CL1
50 X DRIVE ASSY
+16.5V
+5V
VRN DC/DC Conv.
VRN
IC1101 DK Mod.
Resonance Block
– Reset Block
X1
Logic Block
SUS OUT
IC1202 Mask Mod.
Drive Signal
PSUS
+6.5V
Regulator
15V DC/DC Conv.
VF
X2
X4
X3
SUS CLAMP 2 ASSY
CL2
D4
D11
LED_R
LED_B
REM
V+3V ACT
V+8V
Vsus_ADJ
RELAY,
PD_TRIGGER
AC_DET,
DRF
V+3V_D
V+1V_D
DC-DC Converter Module (AXY1116)
SCAN_PD
YDRV_PD
YSUS_PD
YDD_PD
SCN5V_PD
D10
Vofs_ADJ,VYPRST_ADJ
SCL,
SCA
DAC
SCAN
YSUS
XSUSTN_PD
XDD_CNV_PD
XDRIVE_PD
XSUS
D9
Pulse Width
PS_PWDN
SQ_PD
OR
PD
Mask
PD_MUTE
ADR_PD1
IC3151 (M30620FCPGP)
Module Ucom
PSIZE
D8
D5
UART SW
IC3401 (PEG122C-K)
Sequence Processor
LVDS
D7
D6
FIELD
VD
HD
H DET
IC3301 Flash Memory
AUDIO L
AUDIO R
RA, GA, BA
DCLK, DE
SCL, SDA
A_MUTE,A_STBY_B
A_NG
IC3001
TMDS Receiver
D3
Bus Buffer
V+3V STB
REM
STB_MT
TMDS
DDC
D2
D1
MDR CONNECTOR
DVI CONNECTOR
HD DIGITAL ASSY
AC INLET
POWER SW
HD LED ASSY
L1
AD1
CN1501
AD2
CN1502
50 ADDRESS ASSY
V+8V
AN/P BN/P
CN/P DN/P CLKN/P
V+3V
IC1501 LVDS Receiver
(PEE002A-K)
V+5V
V+60V
Resonance Block
V+ADR5
V+ADR4
V+ADR3
V+ADR2
V+ADR1
CLK/LE/HBLK/LBLK
R/G/B
IC1555 Driver IC
IC1554 Driver IC
IC1553 Driver IC
IC1552 Driver IC
IC1551 Driver IC

3.3 50 ADDRESS ASSY

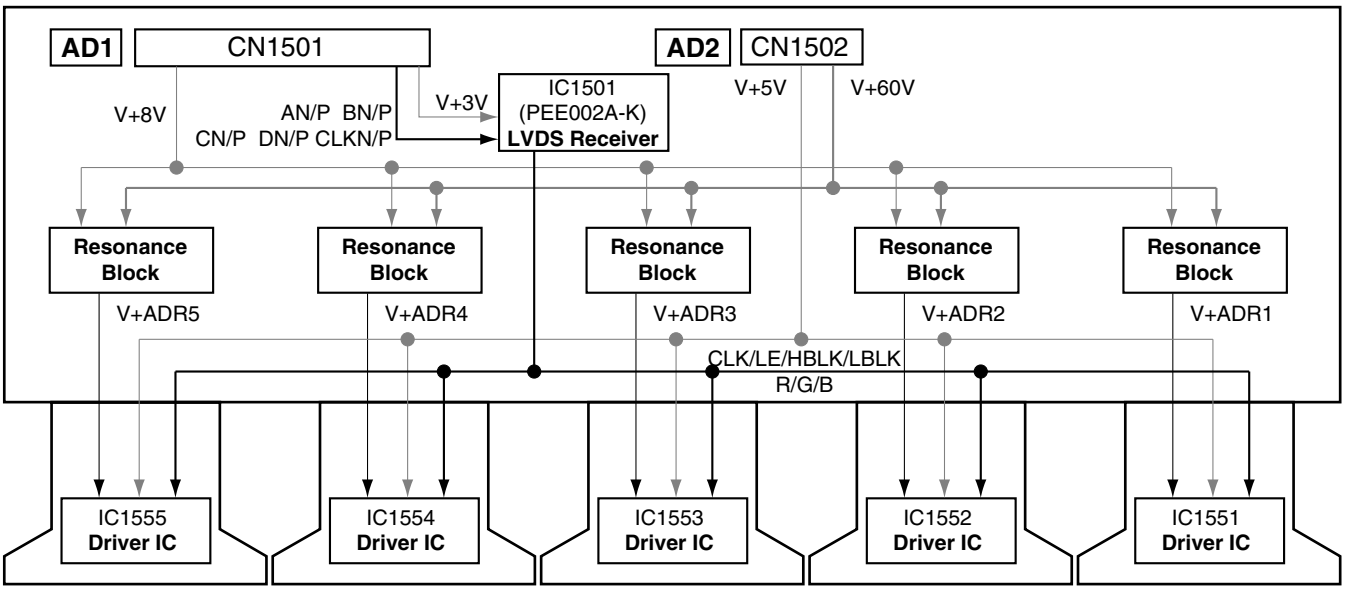

3.4 50 SCAN A and B ASSYS

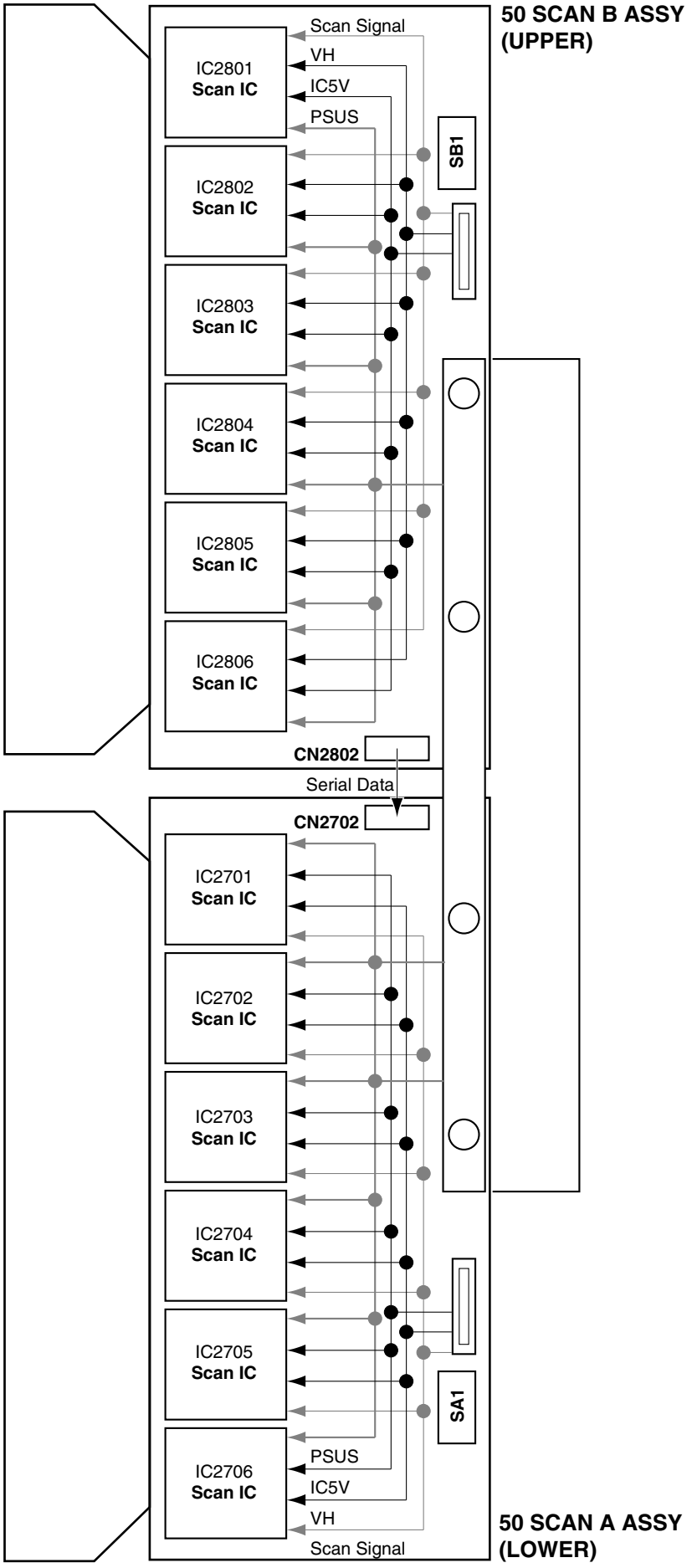

3.5 50 X DRIVE, SUS CLAMP 1 and SUS CLAMP 2 ASSYS

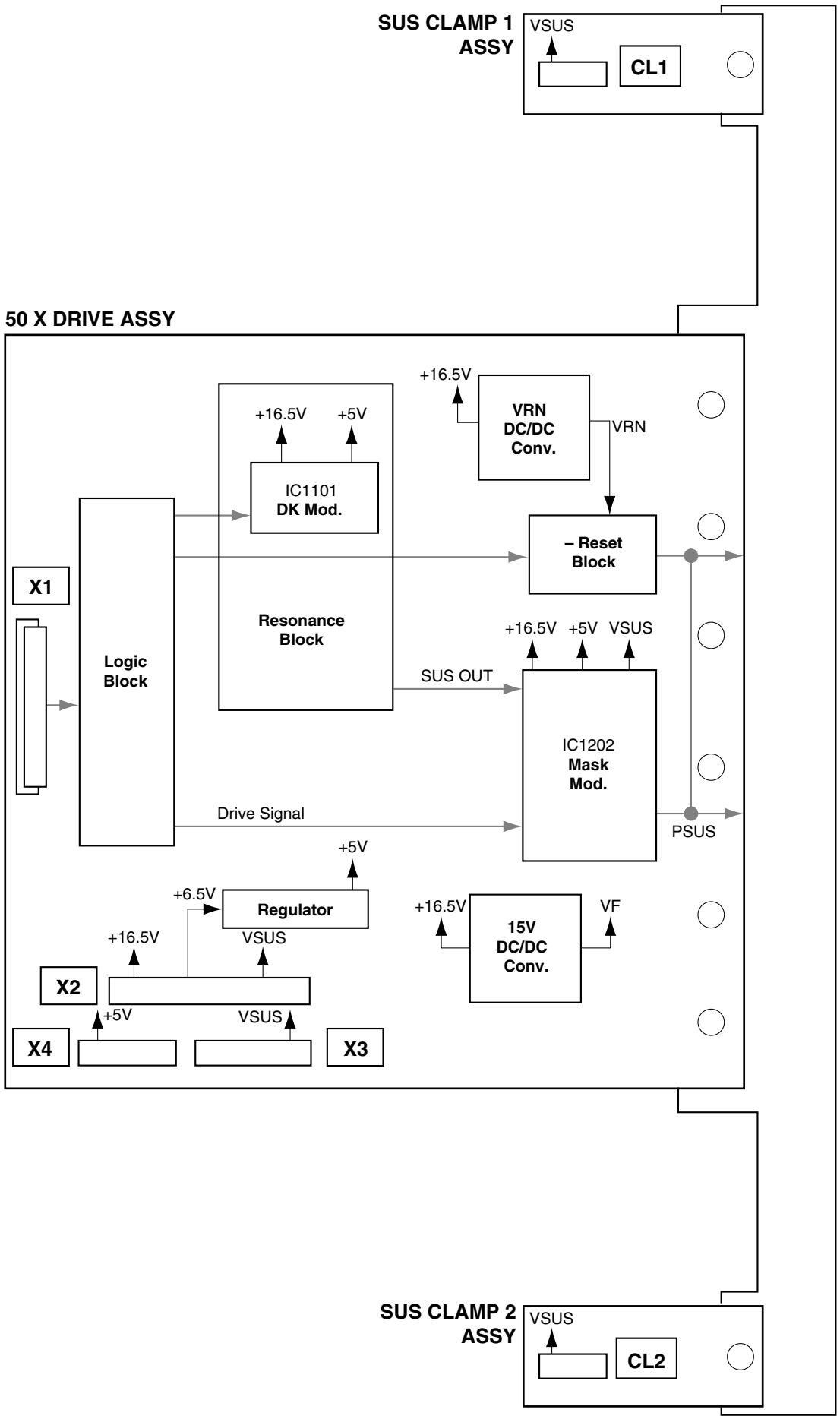

3.6 50 Y DRIVE ASSY

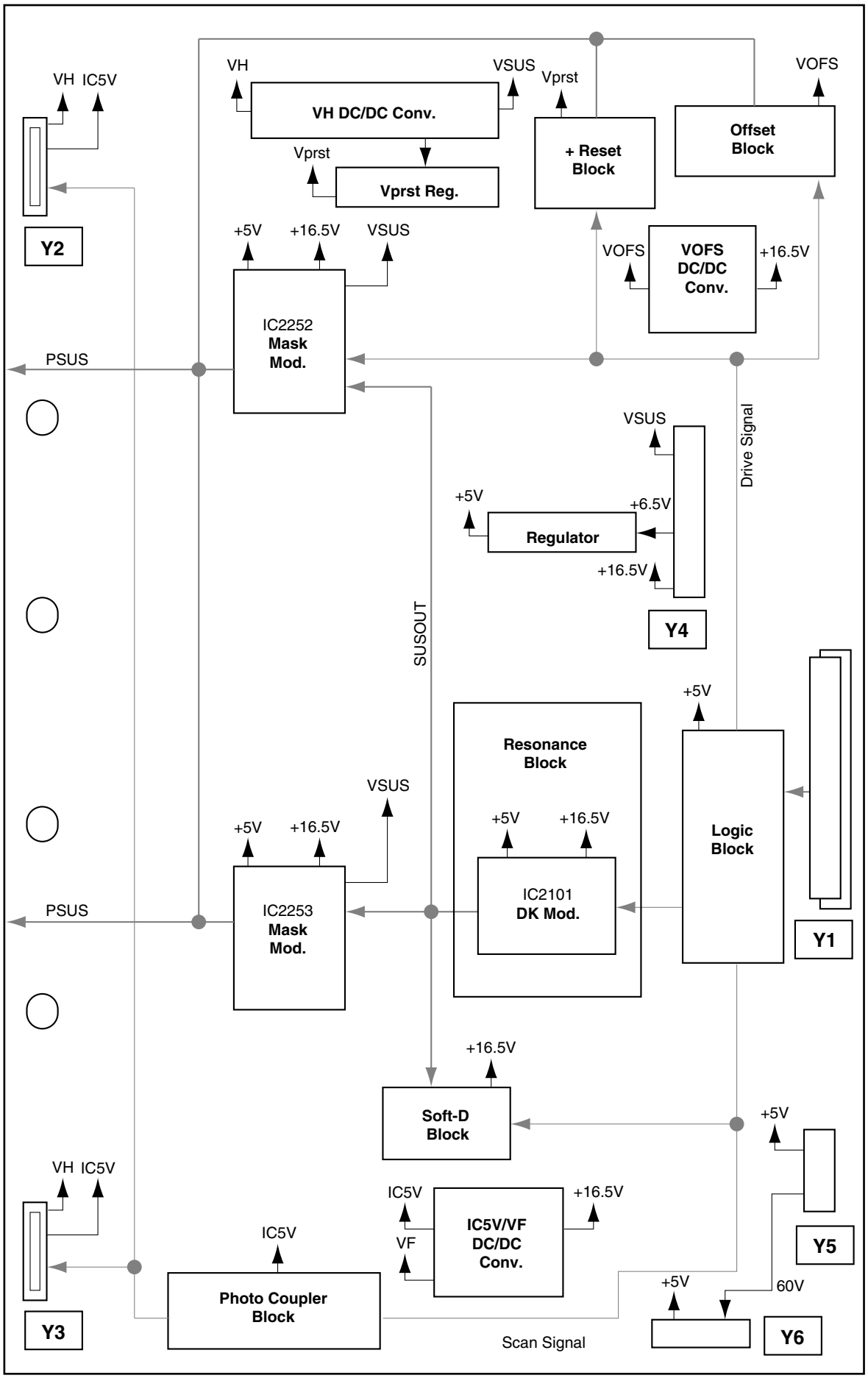

3.7 HD DIGITAL ASSY

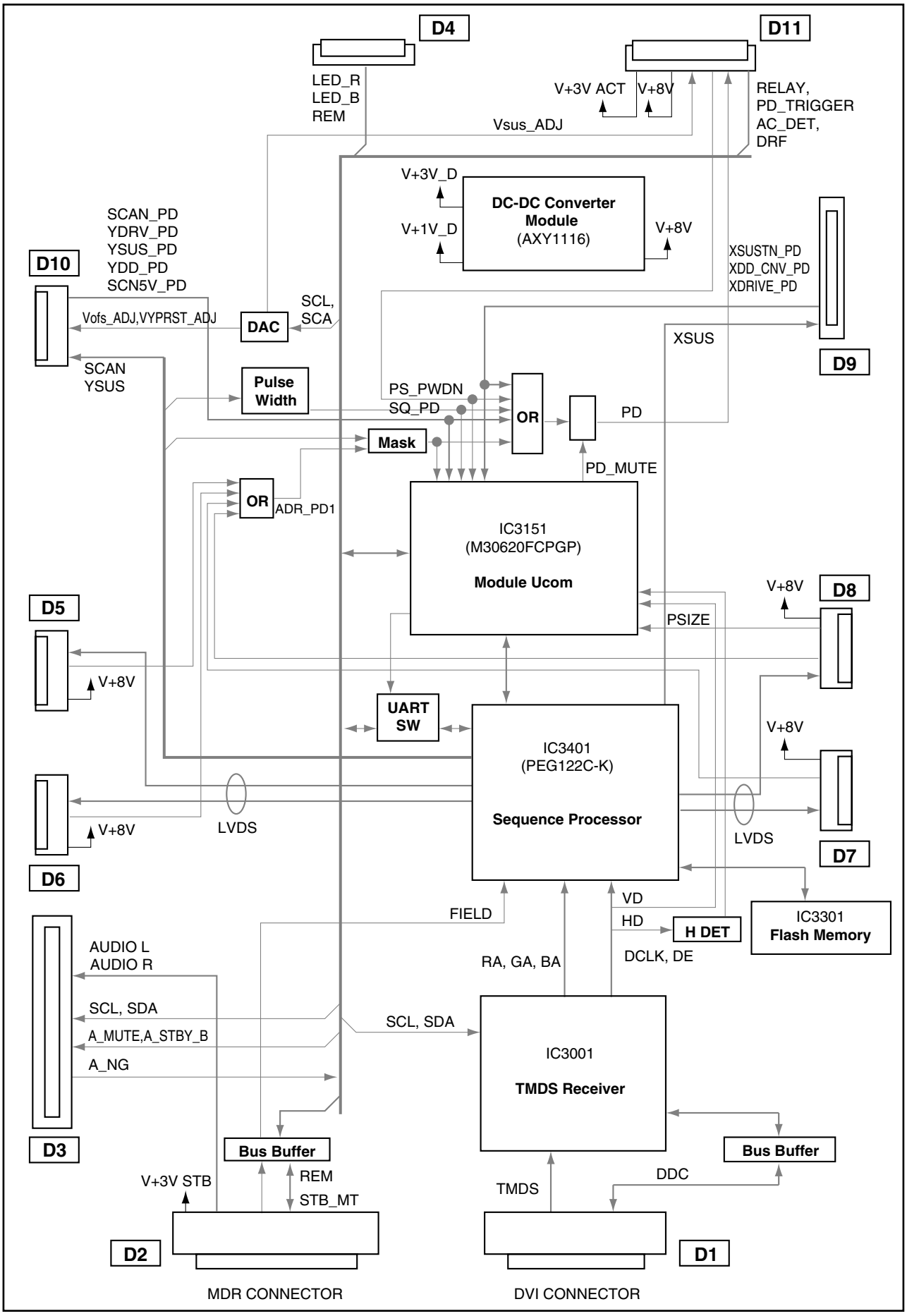

3.8 HD AUDIO ASSY

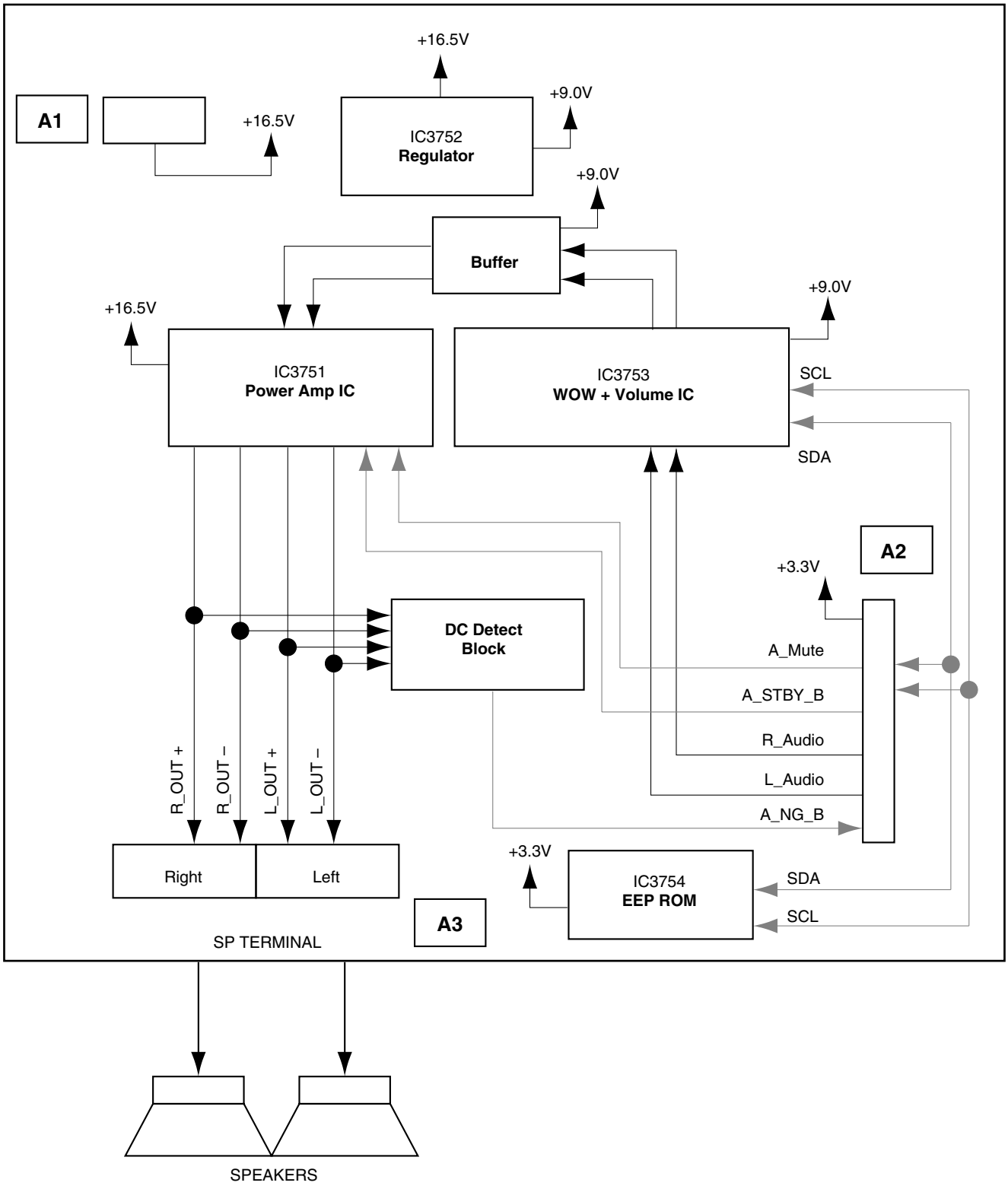

3.9 POWER SUPPLY UNIT

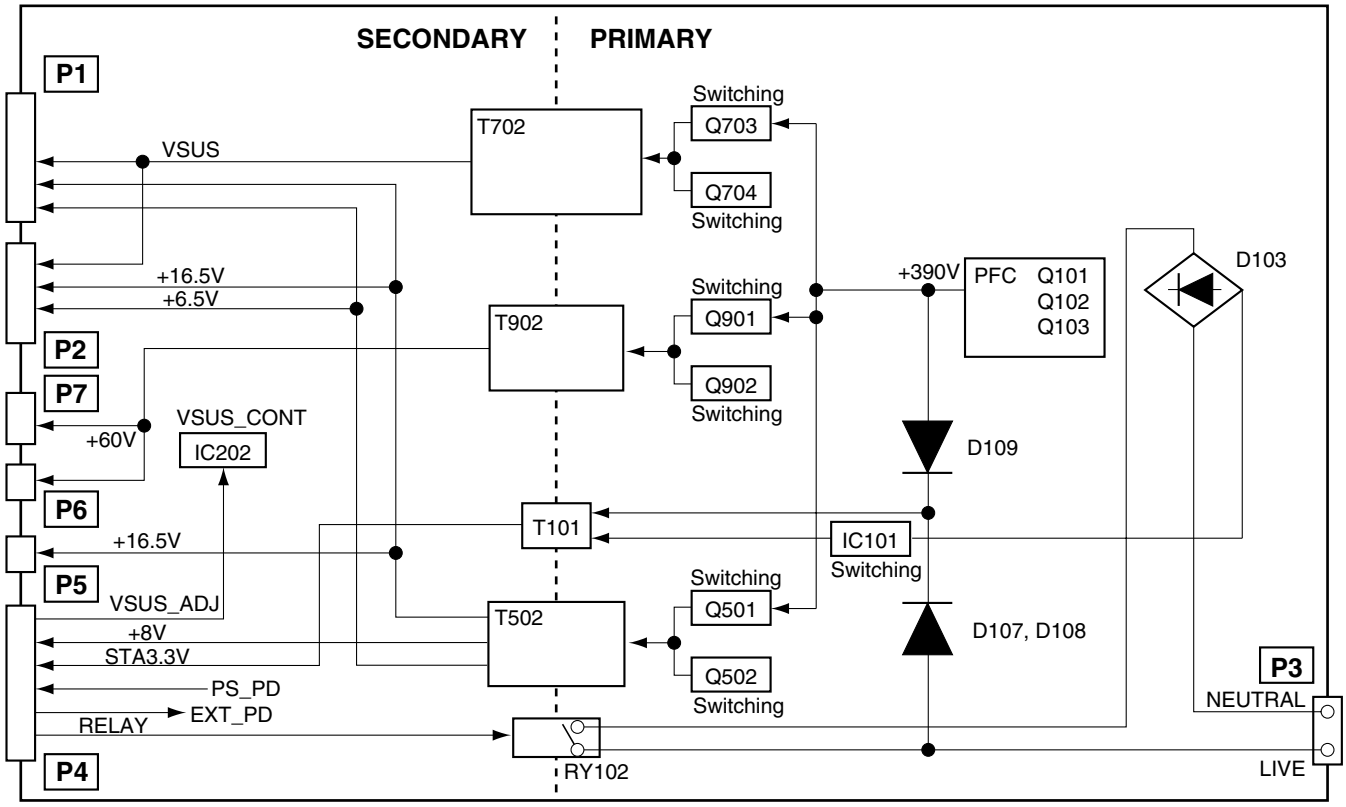

3.10 WAVEFORMS

Note : The encircled numbers denote measuring point in the schematic diagram.
Refer to service manual (ARP3268).

50 ADDRESS ASSY

50 ADDRESS RESONANCE BLOCK

① Control signal of resonance circuit (1 field)
Input : VIDEO 60Hz
Signal : Color-bar (MKSS17)
①-1 CH1 : ADR_B2
V : 1V/div H : 2msec/div
①-2 CH2 : ADR_U2
V : 1V/div H : 2msec/div
①-3 CH3 : ADR_D2
V : 1V/div H : 2msec/div

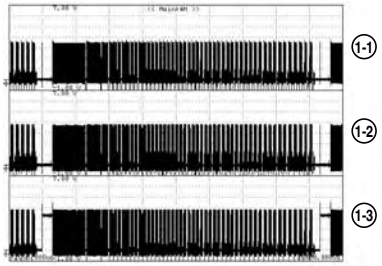

① Control signal of resonance circuit (2 FS)
Input : VIDEO 60Hz
Signal : Color-bar (MKSS17)
①-1 CH1 : ADR_B2
V : 1V/div H : 2msec/div
①-2 CH2 : ADR_U2
V : 1V/div H : 2msec/div
①-3 CH3 : ADR_D2
V : 1V/div H : 2msec/div

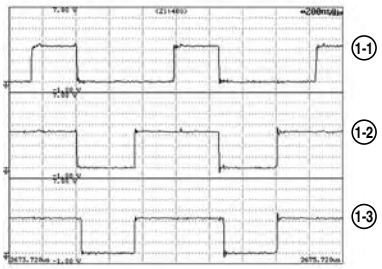

50 ADDRESS LOGIC BLOCK

② VADR (1 field)
Input : VIDEO 60Hz
Signal : Color-bar (MKSS17)
CH2 : IC1555-pin 3 (VDD2)
V : 10V/div H : 2msec/div

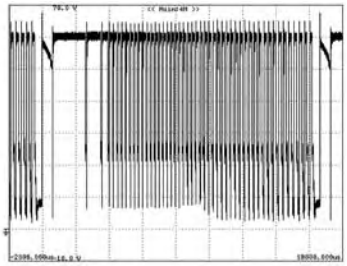

② VADR (1 field)
Input : VIDEO 60Hz
Signal : Checkered pattern of Black-White (MKSS13)
CH2 : IC1555-pin 3 (VDD2)
V : 10V/div H : 2msec/div

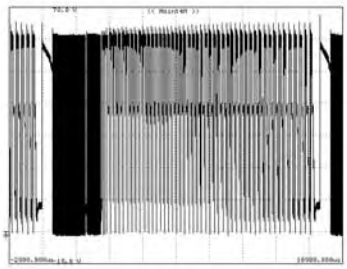

② VADR (2 FS)
Input : VIDEO 60Hz
Signal : Checkered pattern of Black-White (MKSS13)
CH2 : IC1555-pin 3 (VDD2)
V : 10V/div H : 200nsec/div

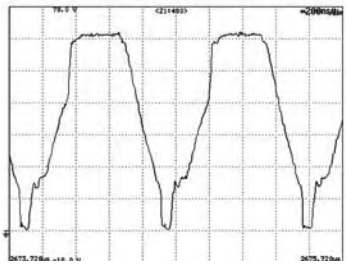

TCP LOGIC

③ Incoming signal of TCP (1 field)
Input : VIDEO 60Hz
Signal : Color-bar (MKSS17)
③-1 CH1 : IC1555-pin 3 (VDD2)
V : 10V/div H : 2msec/div
③-2 CH2 : IC1555-pin 9 (A3)
V : 1V/div H : 2msec/div
③-3 CH3 : IC1555-pin 16 (CLK)
V : 1V/div H : 2msec/div
③-4 CH4 : IC1555-pin 14 (LE)
V : 1V/div H : 2msec/div
③-5 CH5 : IC1555-pin 19 (HBLK)
V : 1V/div H : 2msec/div
③-6 CH6 : IC1555-pin 17 (LBLK)
V : 1V/div H : 2msec/div

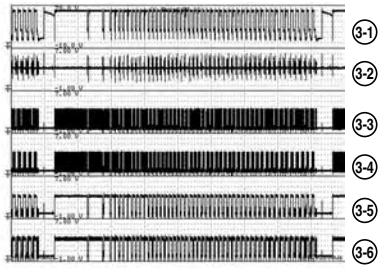

③ Incoming signal of TCP (1 field)
Input : VIDEO 60Hz
Signal : Checkered pattern of Black-White (MKSS13)
③-1 CH1 : IC1555-pin 3 (VDD2)
V : 10V/div H : 2msec/div
③-2 CH2 : IC1555-pin 9 (A3)
V : 1V/div H : 2msec/div
③-3 CH3 : IC1555-pin 16 (CLK)
V : 1V/div H : 2msec/div
③-4 CH4 : IC1555-pin 14 (LE)
V : 1V/div H : 2msec/div
③-5 CH5 : IC1555-pin 19 (HBLK)
V : 1V/div H : 2msec/div
③-6 CH6 : IC1555-pin 17 (LBLK)
V : 1V/div H : 2msec/div

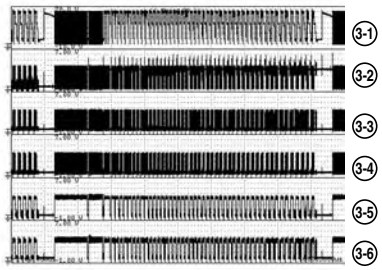

③ Incoming signal of TCP (Resonance part)
Input : VIDEO
Signal : Checkered pattern of Black-White (MKSS13)
③-1 CH1 : IC1555-pin 3 (VDD2)
V : 10V/div H : 200nsec/div
③-2 CH2 : IC1555-pin 9 (A3)
V : 1V/div H : 200nsec/div
③-3 CH3 : IC1555-pin 16 (CLK)
V : 1V/div H : 200nsec/div
③-4 CH4 : IC1555-pin 14 (LE)
V : 1V/div H : 200nsec/div
③-5 CH5 : IC1555-pin 19 (HBLK)
V : 1V/div H : 200nsec/div
③-6 CH6 : IC1555-pin 17 (LBLK)
V : 1V/div H : 200nsec/div

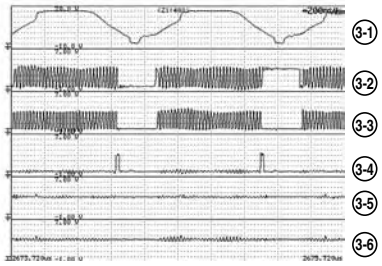

50 X DRIVE, 50 Y DRIVE ASSY

1 Drive output signal (1 field, Color-bar)

1-1 **CH1 : R1277 (XPSUS) - K1203 (SUSGND)**
V : 100V/div H : 2msec/div (X DRIVE Assy)
1-2 **CH2 : K2701 (SCANOUT) - K2330 (SUSGND)**
V : 100V/div H : 2msec/div (SCAN A Assy)
1-3 **CH3 : F2301 (YPSUS) - K2330 (SUSGND)**
V : 100V/div H : 2msec/div (Y DRIVE Assy)

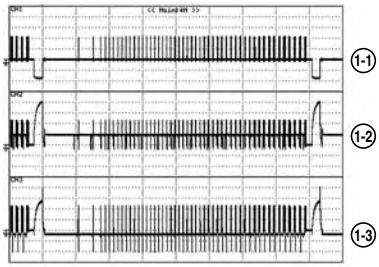

2 X Drive pulse control signal (Color-bar)

2-1 **CH1 : K1009 (XSUS-MSK) - K1001 (DGND)**
V : 1V/div H : 2msec/div (X DRIVE Assy)
2-2 **CH2 : K1005 (XNR-D) - K1001 (DGND)**
V : 1V/div H : 2msec/div (X DRIVE Assy)

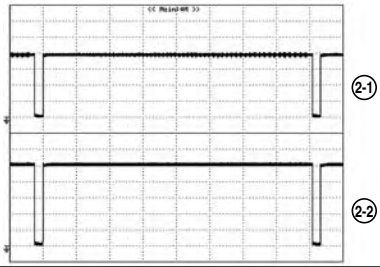

3 Y Drive pulse control signal (Color-bar)

3-1 **CH1 : K2007 (YNOFS) - K2002 (GND_D)**
V : 1V/div H : 2msec/div (Y DRIVE Assy)
3-2 **CH2 : K2005 (YSUS-MSK) - K2002 (GND_D)**
V : 1V/div H : 2msec/div (Y DRIVE Assy)
3-3 **CH3 : K2008 (YNRST) - K2002 (GND_D)**
V : 1V/div H : 2msec/div (Y DRIVE Assy)
3-4 **CH4 : K2006 (SOFT-D) - K2002 (GND_D)**
V : 1V/div H : 2msec/div (Y DRIVE Assy)
3-5 **CH5 : K2023 (YPR-U) - K2002 (GND_D)**
V : 1V/div H : 2msec/div (Y DRIVE Assy)

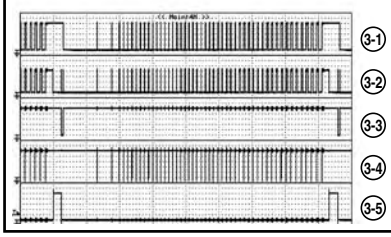

4 Scan control signal (1 field, Color-bar)

4-1 **CH1 : TP2001 (LE) - K2002 (GND-D)**
V : 1V/div H : 2msec/div (X DRIVE Assy)
4-2 **CH2 : TP2008 (CLK) - K2002 (GND-D)**
V : 1V/div H : 2msec/div (X DRIVE Assy)
4-3 **CH3 : TP2003 (SI-H) - K2002 (GND-D)**
V : 1V/div H : 2msec/div (X DRIVE Assy)
4-4 **CH4 : TP2004 (CLR) - K2002 (GND-D)**
V : 1V/div H : 2msec/div (X DRIVE Assy)
4-5 **CH5 : TP2005 (OC2) - K2002 (GND-D)**
V : 1V/div H : 2msec/div (X DRIVE Assy)
4-6 **CH6 : TP2006 (OC1) - K2002 (GND-D)**
V : 1V/div H : 2msec/div (X DRIVE Assy)

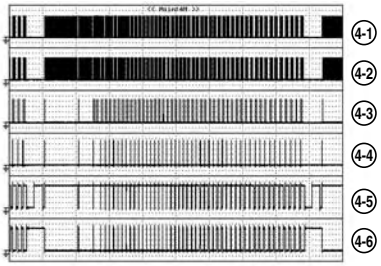

5 Reset pulse signal

5-1 **CH1 : R1277 (XPSUS) - K1203 (SUSGND)**
V : 100V/div H : 100µsec/div (X DRIVE Assy)
5-2 **CH2 : K2701 (SCANOUT) - K2330 (SUSGND)**
V : 100V/div H : 100µsec/div (SCAN A Assy)
5-3 **CH3 : F2301 (YPSUS) - K2330 (SUSGND)**
V : 100V/div H : 100µsec/div (Y DRIVE Assy)

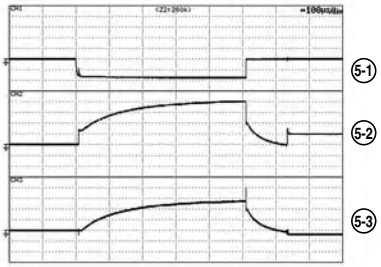

6 Sustain pulse signal (1 sub, sub field)

6-1 **CH1 : R1277 (XPSUS) - K1203 (SUSGND)**
V : 50V/div H : 5µsec/div (X DRIVE Assy)
6-2 **CH2 : K2701 (SCANOUT) - K2330 (SUSGND)**
V : 50V/div H : 5µsec/div (SCAN A Assy)
6-3 **CH3 : F2301 (YPSUS) - K2330 (SUSGND)**
V : 50V/div H : 5µsec/div (Y DRIVE Assy)

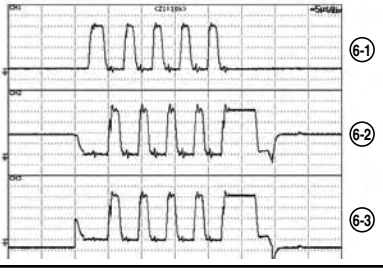

7 Sustain signal

7-1 **CH1 : F2301 (YPSUS) - K2330 (SUSGND)**
V : 50V/div H : 500nsec/div (Y DRIVE Assy)
7-2 **CH2 : K2004 (YSUS-G) - K2002 (DGND)**
V : 5V/div H : 500nsec/div (Y DRIVE Assy)
7-3 **CH3 : K2011 (YSUS-U) - K2002 (DGND)**
V : 5V/div H : 500nsec/div (Y DRIVE Assy)
7-4 **CH4 : K2009 (YSUS-B) - K2002 (DGND)**
V : 5V/div H : 500nsec/div (Y DRIVE Assy)
7-5 **CH5 : K2010 (YSUS-D) - K2002 (DGND)**
V : 5V/div H : 500nsec/div (Y DRIVE Assy)

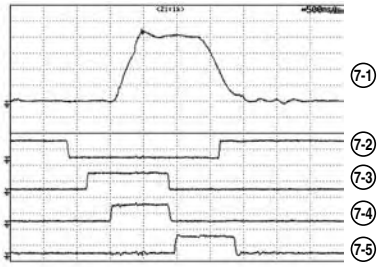

5. PCB PARTS LIST

NOTES:
- *Parts marked by "NSP" are generally unavailable because they are not in our Master Spare Parts List.*
- *The ⚠ mark found on some component parts indicates the importance of the safety factor of the part. Therefore, when replacing, be sure to use parts of identical designation.*
- *When ordering resistors, first convert resistance values into code form as shown in the following examples.*

Ex.1 When there are 2 effective digits (any digit apart from 0), such as 560 ohm and 47k ohm (tolerance is shown by J=5%, and K=10%).

560 Ω	→ *56 x 10¹* →	*561*	*RD1/4PU 5 6 1 J*
47k Ω	→ *47 x 10³* →	*473*	*RD1/4PU 4 7 3 J*
0.5 Ω	→ *R50*		*RN2H R 5 0 K*
1 Ω	→ *1R0*		*RS1P 1 R 0 K*

Ex.2 When there are 3 effective digits (such as in high precision metal film resistors).

5.62k Ω	→ *562 x 10¹* →	*5621*	*RN1/4PC 5 6 2 1 F*

■ LIST OF WHOLE PCB ASSEMBLIES

Mark	Symbol and Description	PDP-506PE /WYVI	PDP-506PU /KUCXC
NSP	1..PANEL CHASSIS (506) ASSY	AWU1143	AWU1143
NSP	2..50 ADDRESS ASSY	AWV2208	AWV2208
NSP	2..50 SCAN ASSY	AWV2211	AWV2211
NSP	3..50 SCAN A ASSY	AWW1026	AWW1026
NSP	3..50 SCAN B ASSY	AWW1027	AWW1027
NSP	1..50 X DRIVE ASSY	AWV2257	AWV2209 or AWV2257
	2..50 X DRIVE ASSY	AWW1075	AWW1020 or AWW1075
	2..SUS CLAMP 1 ASSY	AWW1022	AWW1022
	2..SUS CLAMP 2 ASSY	AWW1023	AWW1023
	1..50 Y DRIVE ASSY	AWV2258	AWV2210 or AWV2258
NSP	1..HD DIGITAL ASSY	AWV2202	AWV2202
	2..HD DIGITAL ASSY	AWW1028	AWW1028
	2..HD LED ASSY	AWW1029	AWW1029
	2..HD IR ASSY	AWW1030	AWW1030
	1..HD AUDIO ASSY	AWV2203	AWV2203
⚠	1..POWER SUPPLY UNIT	AXY1112	AXY1112

50 X DRIVE ASSY

AWW1075 and AWW1020 are constructed the same except for the following :

Mark	Symbol and Description	AWW1075	AWW1020
	IC1101	AXF1142	AXF1155
	C1101	ACG1112 (0.22U/250V)	ACG1088 (0.1U/250V)
	C1106-C1110	Not used	ACE1178
	C1112, C1113 (0.22U/250V)	ACG1112	Not used
	C1161-C1164, C1166	ACE1168	Not used
	C1297, C1298 (3300p/630V)	ACG1129	Not used

50 Y DRIVE ASSY

AWV2258 and AWV2210 are constructed the same except for the following :

Mark	Symbol and Description	AWV2258	AWV2210
	IC2101	AXF1142	AXF1155
	C2103	ACG1112 (0.22U/250V)	ACG1088 (0.1U/250V)
	C2107, C2108 (0.22U/250V)	ACG1112	Not used
	C2131-C2134, C2136	ACE1168	ACE1178
	C2271	ACG1124 (0.1U/100V)	ACG1118 (0.33U/100V)
	C2272 (0.1U/100V)	ACG1124	Not used

■ PCB PARTS LIST FOR PDP-506PE/WYVI UNLESS OTHER WISE NOTED

Mark	No.	Description	Part No.
50 ADDRESS ASSY			
		[50 ADR LOGIC BLOCK]	
		SEMICONDUCTORS	
	IC1501		PEE002A
		COILS AND FILTERS	
	L1504	CHIP SOLID INDUCTOR	QTL1013
		CAPACITORS	
	C1501,C1502		CKSRYB105K6R3
	C1509,C1510		CKSSYB102K50
	C1503-C1507,C1551-C1555		CKSSYF104Z16
		RESISTORS	
	R1530,R1531		RS1/16S0R0J
	R1505-R1509		RS1/16SS1000F
	Other Resistors		RS1/16SS###J
		OTHERS	
	CN1501	40P CONNECTOR	AKM1217
	CN1502	PH CONNECTOR 4P	AKM1290
		[50 ADR RESONANCE BLOCK]	
		SEMICONDUCTORS	
	IC1601,IC1602		TND307TD
	Q1613		2SA1163
	Q1614-Q1616		HAT1110R
	Q1606,Q1608,Q1611		QSZ2
	Q1612		RN1901
	Q1601-Q1605		SP8M41
	D1612		1SS302
	D1625-D1629		1SS355
	D1631-D1650		EP05FA20
	D1601,D1605,D1607,D1610,D1613		UDZS15(B)
	D1616,D1620,D1622		UDZS15(B)
		COILS AND FILTERS	
	L1601-L1605	SMD COIL	ATH1163
		CAPACITORS	
	C1609 (0.1U/100V)		ACG1098
	C1601,C1606,C1610 (0.068U/100V)		ACG1123
	C1611,C1614 (0.068U/100V)		ACG1123
	C1602-C1605 (56UF/80V)		ACH1405
	C1613		CKSRYB104K25
	C1619		CKSYB105K16
		RESISTORS	
	R1606,R1611,R1613,R1621		RS1/16SS###J
	Other Resistors		RS1/16S###J
50 SCAN A ASSY			
		SEMICONDUCTORS	
	IC2701-IC2706		AN16025A
	D2701-D2707		1SS355
		CAPACITORS	
	C2701,C2711,C2721 (0.1U/250V)		ACG1088
	C2731,C2741,C2751 (0.1U/250V)		ACG1088
	C2710,C2720,C2730,C2740,C2750		CCSRCH181J50
	C2760		CCSRCH181J50
	C2708,C2709,C2718,C2719		CCSRCH331J50
	C2728,C2729,C2738,C2739		CCSRCH331J50
	C2748,C2749,C2758,C2759		CCSRCH331J50
	C2705-C2707,C2715-C2717		CCSRCH390J50
	C2725-C2727,C2735-C2737		CCSRCH390J50
	C2745-C2747,C2755-C2757		CCSRCH390J50
	C2703,C2713,C2723,C2733,C2743		CKSRYB105K6R3
	C2753		CKSRYB105K6R3
		RESISTORS	
	R2705,R2710,R2713,R2716,R2719		RAB4C221J
	R2722		RAB4C221J
	Other Resistors		RS1/16S###J
		OTHERS	
	CN2702	PH CONNECTOR 3P	AKM1274
	CN2701	13P BRIDGE CONNECTOR	AKP1261
50 SCAN B ASSY			
		SEMICONDUCTORS	
	IC2801-IC2806		AN16025A
	IC2807		TC7SH08FUS1
	D2801-D2807		1SS355
		CAPACITORS	
	C2801,C2811,C2821 (0.1U/250V)		ACG1088
	C2831,C2841,C2851 (0.1U/250V)		ACG1088
	C2810,C2820,C2830,C2840,C2850		CCSRCH181J50
	C2860		CCSRCH181J50
	C2808,C2809,C2818,C2819		CCSRCH331J50
	C2828,C2829,C2838,C2839		CCSRCH331J50
	C2848,C2849,C2858,C2859		CCSRCH331J50
	C2805-C2807,C2815-C2817		CCSRCH390J50
	C2825-C2827,C2835-C2837		CCSRCH390J50
	C2845-C2847,C2855-C2857		CCSRCH390J50
	C2803,C2813,C2823,C2833,C2843		CKSRYB105K6R3
	C2853,C2861		CKSRYB105K6R3
		RESISTORS	
	R2803,R2808,R2811,R2814,R2817		RAB4C221J
	R2820		RAB4C221J
	Other Resistors		RS1/16S###J
		OTHERS	
	CN2802	PH CONNECTOR 3P	AKM1274
	CN2801	13P BRIDGE CONNECTOR	AKP1261
50 X DRIVE ASSY			
		[50X LOGIC BLOCK]	
		SEMICONDUCTORS	
	IC1001		TC74ACT541FT
	IC1002		TC74VHC00FTS1

Mark No.	Description	Part No.
CAPACITORS		
C1003		CEHAT470M16
C1001,C1002		CKSRYB104K16
RESISTORS		
R1001,R1003		RAB4C470J
R1008,R1009		RAB4C472J
Other Resistors		RS1/16S###J
OTHERS		
CN1001	18P FFC CONNECTOR	VKN1310
[50X RESONANCE BLOCK]		
SEMICONDUCTORS		
IC1101		AXF1142
IC1141		BA10393F
Q1141		2SC4116
D1101-D1105		D1FL40
COILS AND FILTERS		
L1103,L1104	CHOKE COIL	ATH1119
L1101,L1102	CHOKE COIL	ATH1187
L1105,L1106	CHOKE COIL	ATH1187
CAPACITORS		
C1161-C1164,C1116 (3.3U/250V)		ACE1168
C1101,C1112,C1113 (0.22U/250V)		ACG1112
C1121 (470p/630V)		ACG1126
C1105		CCG1186
C1141,C1142,C1144,C1145		CKSRYB104K16
C1102,C1146		CKSRYB105K6R3
C1103		CKSYB105K25
RESISTORS		
R1101		ACN1168
R1142,R1146		RS1/10S1003F
R1122,R1123		RS1/10S104J
R1148,R1150		RS1/16S5601F
R1151,R1155		RS1/16S6801F
R1106,R1121		RS2MMF100J
Other Resistors		RS1/16S###J
[50X SUS BLOCK]		
SEMICONDUCTORS		
IC1202		AXF1140
IC1201		MM1565AF
IC1252		PS9117
IC1251		TND301S
IC1271		TND307TD
Q1251		2SC2412K
Q1272		2SK3325-Z
D1281		1SS302
D1201		1SS355
D1252		CRH01
D1282		UDZS16(B)
D1251		UDZS5R6(B)
COILS AND FILTERS		
L1204,L1211	INDUCTOR	ATH1186
F1201	INDUCTOR	CTF1449
L1201,L1205,L1231		LFEA100J

Mark No.	Description	Part No.
CAPACITORS		
C1214-C1217		ACE1178
C1212,C1213		ACH1423
C1231		CEHAT101M10
C1206		CEHAT101M25
C1283		CEHAT2R2M2E
C1208		CEHAT470M16
C1222,C1272		CEHAT470M25
C1221		CKSRYB105K6R3
C1204,C1207,C1223,C1251,C1253		CKSRYF104Z50
C1273		CKSRYF104Z50
C1220		CKSYB105K25
RESISTORS		
R1204		ACN1166
R1213		ACN1168
R1276,R1277		RS3LMF470J
Other Resistors		RS1/16S###J
OTHERS		
KN1201-KN1206	GROUND PLATE	ANK-142
KN1208-KN1211	GROUND PLATE	ANK-142
CN1202	6P TOP POST	B6B-EH
CN1201	8P TOP POST	B8B-EH
[50X D-D CON BLOCK]		
SEMICONDUCTORS		
IC1321		PS2701A-1(L)
IC1326		TA76431FR
Q1324		2SA1037K
Q1302		2SC4081
Q1301,Q1323		2SD1898
Q1321,Q1325,Q1351		HN1C01FU
D1303,D1324		1SS301
D1304,D1307,D1325,D1328		1SS355
D1301,D1302,D1326,D1327		CRH01
D1321		D1FK60
D1329,D1330		UDZS4R7(B)
D1306,D1323,D1331		UDZS5R1(B)
COILS AND FILTERS		
⚠T1301	SWITCHING TRANS.	ATK1159
⚠T1321	SWITCHING TRANS.	ATK1160
CAPACITORS		
C1325		ACH1428
C1326		CEHAT100M50
C1302,C1321		CEHAT101M25
C1301,C1303,C1323		CKSRYB103K50
C1304,C1306,C1327		CKSRYB104K16
C1307,C1324		CKSYB105K25
RESISTORS		
R1337		RAB4C472J
R1321,R1322,R1326,R1339		RS1/10S224J
VR1321		CCP1392
Other Resistors		RS1/16S###J

Mark No.	Description	Part No.
SUS CLAMP 1 ASSY		
SEMICONDUCTORS		
D1631		DF20L60U
CAPACITORS		
C1632		ACE1179
OTHERS		
KN1632	GROUND PLATE	ANK-142
CN1631	3P TOP POST	B3B-EH
KN1631	WRAPPING TERMINAL	VNF1084
SUS CLAMP 2 ASSY		
SEMICONDUCTORS		
D1641		DF20L60U
CAPACITORS		
C1642		ACE1179
OTHERS		
KN1642	GROUND PLATE	ANK-142
CN1641	3P TOP POST	B3B-EH
KN1641	WRAPPING TERMINAL	VNF1084
50 Y DRIVE ASSY		
[50Y LOGIC BLOCK]		
SEMICONDUCTORS		
IC2002		TC74ACT540FT
IC2001,IC2004		TC74ACT541FT
IC2003,IC2005		TC74VHC08FTS1
CAPACITORS		
C2003		CEHAT470M16
C2001,C2002,C2004-C2006		CKSSYB104K10
RESISTORS		
R2003,R2006		RAB4C101J
R2001,R2002,R2017,R2021		RAB4C470J
R2004,R2005,R2019,R2020		RAB4C472J
Other Resistors		RS1/16S###J
OTHERS		
CN2001	40P CONNECTOR	AKM1217
[50Y RESONANCE BLOCK]		
SEMICONDUCTORS		
IC2101		AXF1142
IC2141		BA10393F
Q2141		2SC4081
D2101-D2105		D1FL40
COILS AND FILTERS		
L2103,L2104	CHOKE COIL	ATH1119
L2101,L2102	CHOKE COIL	ATH1187
L2105,L2106	CHOKE COIL	ATH1187
CAPACITORS		
C2131-C2134,C2136 (3.3U/250V)		ACE1168
C2103,C2107,C2108 (0.22U/250V)		ACG1112
C2104 (470p/630V)		ACG1126
C2106		CCG1186
C2101,C2145		CKSRYB105K6R3
C2141,C2143,C2144		CKSSYB104K10
C2102		CKSYB105K25
RESISTORS		
R2101		ACN1174
R2142,R2143		RS1/10S1003F
R2103,R2107		RS1/10S104J
R2146,R2149		RS1/16S5601F
R2147,R2151		RS1/16S6801F
R2102		RS2MMF100J
R2108		RS3LMF100J
Other Resistors		RS1/16S###J
[50Y SUS BLOCK]		
SEMICONDUCTORS		
IC2252,IC2253		AXF1141
IC2350		MM1565AF
IC2250		PS9117
IC2231,IC2251		TND301S
IC2203,IC2221		TND307TD
Q2202		2SA2142
Q2250		2SC4081
Q2290		2SK3050
Q2221		2SK3325-Z
Q2280,Q2281		2SK3399
D2233		1SS301
D2213		1SS302
D2203,D2212,D2351		1SS355
D2202,D2204,D2205,D2234		CRH01
D2251,D2252,D2272		CRH01
D2211		D1FK60
D2232,D2271		UDZS16(B)
D2250		UDZS5R6(B)
COILS AND FILTERS		
L2353	INDUCTOR	ATH1186
F2301-F2320	FERRITE BEAD	ATX1055
F2352	INDUCTOR	CTF1449
L2350,L2351,L2354		LFEA100J
CAPACITORS		
C2330,C2335,C2341,C2342		ACE1178
C2231 (0.33U/100V)		ACG1118
C2271,C2272 (0.1U/100V)		ACG1124
C2336,C2337		ACH1423
C2270		ACH1426
C2226		ACH1427
C2207		CCSRCH102J50
C2355,C2369		CEHAT101M10
C2357		CEHAT470M16
C2208,C2221,C2339,C2364		CEHAT470M25
C2356		CKSRYB104K16
C2353,C2358,C2359		CKSRYB105K6R3
C2363		CKSRYB473K16
C2209,C2222,C2230,C2252		CKSRYF104Z50
C2250		CKSSYB104K10
C2354,C2360		CKSYB105K25

Mark No.	Description	Part No.
RESISTORS		
R2352		ACN1166
R2304		ACN1174
R2360,R2362		ACN1178
R2277-R2279,R2281		ACN1241
R2210,R2211		RS1/10S151J
R2290		RS1MMF331J
R2222,R2224		RS2MMF5R6J
R2203		RS3LMF821J
Other Resistors		RS1/16S###J
OTHERS		
KN2350,KN2352	GROUND PLATE	ANK-142
KN2354	GROUND PLATE	ANK-142
KN2356,KN2357	GROUND PLATE	ANK-142
KN2359-KN2363	GROUND PLATE	ANK-142
CN2351,CN2352	KR CONNECTOR	B4B-PH-K
CN2350	9P TOP POST	B9B-EH
[50Y SCAN BLOCK]		
SEMICONDUCTORS		
IC2403,IC2405,IC2406,IC2408		PS9117
IC2401		PS9851-2(P)
IC2402,IC2407		TC74ACT540FT
COILS AND FILTERS		
L2401-L2403		LFEA100J
CAPACITORS		
C2404,C2411		ACH1413
C2401,C2407,C2414		CEHAT101M10
C2402,C2403,C2405,C2408-C2410		CKSSYB104K10
C2412		CKSSYB104K10
RESISTORS		
R2407,R2421		RAB4C220J
R2402,R2409		RS1/10S0R0J
Other Resistors		RS1/16S###J
OTHERS		
CN2401	15P BRIDGE CONNECTOR	AKM1200
CN2402	15P BRIDGE CONNECTOR	AKM1200
[50Y VH D-D CON BLOCK]		
SEMICONDUCTORS		
IC2531		BA10358F
IC2502		MIP2E3DMC
IC2503		PS2701A-1(L)
IC2534,IC2535		TA76431FR
Q2533		2SC2412K
Q2531		2SC3425
Q2532		2SD2568
Q2511		HN1C01FU
D2534		1SS355
D2522,D2524		CRH01
D2523,D2532		D1FK60
D2533		UDZS33(B)
D2536		UDZS4R7(B)
D2530,D2531		UDZS8R2(B)
COILS AND FILTERS		
⚠T2503	CONVERTER TRANS.	ATK1158
L2501		LFEA101J

Mark No.	Description	Part No.
CAPACITORS		
C2531		ACE1177
C2516		ACH1360
C2532		ACH1425
C2513		ACH1428
C2520		CEHAT101M16
C2515		CEHAT101M25
C2528		CEHAT221M16
C2514,C2525,C2534		CKSRYB104K16
C2521,C2533,C2535		CKSRYB104K25
RESISTORS		
R2553		RAB4C472J
R2558		RS1/10S0R0J
R2533,R2556		RS1/10S104J
R2534,R2535,R2541		RS1/10S2203F
R2548		RS1/16S1003F
R2550		RS1/16S1802F
R2549,R2557		RS1/16S4702F
R2542,R2545		RS1/16S5601F
VR2503		CCP1390
VR2531		CCP1392
Other Resistors		RS1/16S###J
[50Y D-D CON BLOCK]		
SEMICONDUCTORS		
IC2602		BA10358F
IC2601,IC2603,IC2606		PS2701A-1(L)
IC2605,IC2614		TA76431FR
Q2610		2SA1163
Q2601,Q2609		2SA1576A
Q2608		2SA2005
Q2607		2SC2713
Q2612		2SC4081
Q2605,Q2606		2SD1898
Q2603,Q2604,Q2611		DTC143EUA
Q2602,Q2613,Q2641		HN1C01FU
D2611		1SS226
D2604,D2612		1SS301
D2602,D2613-D2615		1SS355
D2601,D2603,D2609,D2618		CRH01
D2610		D1FL40
D2617		UDZS15(B)
D2607,D2608		UDZS4R7(B)
D2605		UDZS5R1(B)
D2616		UDZS5R6(B)
COILS AND FILTERS		
⚠T2602	CONVERTER TRANS.	ATK1156
⚠T2601	SWITCHING TRANS.	ATK1161
CAPACITORS		
C2608,C2610		CEHAT101M25
C2613		CEHAT221M25
C2606		CEHAT221M6R3
C2607		CKSRYB102K50
C2605,C2612,C2614		CKSRYB103K50
C2601,C2604,C2609		CKSRYB104K16
C2602,C2615		CKSRYB105K6R3
C2603		CKSRYF104Z50
C2611		CKSSYB104K10

Mark No.	Description	Part No.
	RESISTORS	
	R2613	RAB4C472J
	R2641,R2642	RS1/10S224J
A	R2629	RS1/16S1002F
	R2625,R2626	RS1/16S1501F
	R2608,R2612,R2630,R2632,R2635	RS1/16S4701F
	R2618	RS1/16S4702F
	R2636	RS1/16S5601F
	R2652	RS1/16S6801F
	R2627	RS3LMF151J
	VR2601	CCP1390
	Other Resistors	RS1/16S###J
B		
	HD DIGITAL ASSY	
	OTHERS	
	DD CON UNIT	AXY1116
	REMOTE RECEIVER UNIT	RPM7240-H4
	HD DIGITAL ASSY	
	[TMDS RX BLOCK]	
	SEMICONDUCTORS	
	IC3002	BA8274F
C	IC3001	SII1169CTU
	IC3004	SN74AHC32PW
	Q3009	2SC4081
	Q3007	DTA143EUA
	Q3004	DTC124EUA
	Q3005	DTC143EUA
	Q3002,Q3006,Q3008	RN1901
	Q3003	RN2901
	D3001,D3002	1SS355
	D3012	DA204U
	D3007-D3011	RB751V-40
D	D3003	UDZS6R8(B)
	COILS AND FILTERS	
	F3005 CHIP SOLID INDUCTOR	QTL1011
	L3003 CHIP SOLID INDUCTOR	QTL1013
	CAPACITORS	
	C3030	ACH1357
	C3034,C3036,C3038,C3040,C3042	ACH1396
	C3003,C3005,C3009,C3014,C3019	CCSRCH331J50
	C3046	CCSRCH470J50
	C3044,C3045	CCSSCH101J50
E	C3001,C3008,C3011,C3020,C3022	CCSSCH820J50
	C3025-C3027	CCSSCH820J50
	C3018,C3021,C3023,C3024	CKSRYF105Z10
	C3015-C3017,C3028,C3029	CKSSYF104Z16
	C3031,C3032,C3035,C3037,C3039	CKSSYF104Z16
	C3041,C3043	CKSSYF104Z16
	RESISTORS	
	R3007	RAB4C220J
	R3008-R3013	RAB4C470J
	R3018	RAB4C472J
F	R3021	RS1/16S3900F
	Other Resistors	RS1/16S###J

Mark No.	Description	Part No.
	OTHERS	
	CN3003 PH CONNECTOR 6P	AKM1277
	CN3004 PH CONNECTOR 12P	AKM1298
	JA3001 DVI CONNECTOR	AKP1276
	JA3002 MDR CONNECTOR	AKP1277
	[MODULE UCOM BLOCK]	
	SEMICONDUCTORS	
	IC3156	BR24L04FJ-W
	IC3151	M30620FCPGP-U5C
	IC3157	M62334FP
	IC3158	MM1522XU
	IC3155	SN74AHC08PW
	IC3152,IC3153	SN74AHC541PW
	IC3160	TC74VHC123AFTS1
	IC3159	TC7W126FU
	Q3151	2SJ461A
	D3156,D3159,D3161-D3163	1SS355
	D3151,D3152,D3154,D3155,D3158	DAN202U
	CAPACITORS	
	C3151	ACH1357
	C3164	CCSSCH101J50
	C3171,C3172,C3180	CKSRYB105K6R3
	C3154	CKSSYB102K50
	C3152,C3153,C3155-C3158	CKSSYF104Z16
	C3160-C3163,C3165,C3166,C3170	CKSSYF104Z16
	RESISTORS	
	R3160,R3171,R3176	RAB4C101J
	R3174	RAB4C103J
	Other Resistors	RS1/16S###J
	OTHERS	
	⚠X3151 CERAMIC RESONATOR	ASS1178
	[PANEL FLASH BLOCK]	
	SEMICONDUCTORS	
	IC3301	MBM29PL160TD75TN
	IC3304	PST3610UR
	IC3302,IC3305	PST3628UR
	IC3303	SN74AHC08PW
	Q3302	HN1C01FU
	Q3301	RN1901
	CAPACITORS	
	C3311	CCSRCH470J50
	C3317	CCSRCH471J50
	C3304,C3307,C3309	CKSRYB472K50
	C3305,C3310	CKSSYB102K50
	C3315	CKSSYB104K10
	C3301-C3303,C3306,C3308,C3316	CKSSYF104Z16
	RESISTORS	
	All Resistors	RS1/16S###J
	OTHERS	
	⚠X3302 CRYSTAL OSCILLATOR	ASS1188

Mark No.	Description	Part No.
[SQ ASIC BLOCK]		
SEMICONDUCTORS		
IC3401		PEG122C
COILS AND FILTERS		
F3401,F3402	EMI FILTER	CCG1162
L3401-L3403	CHIP SOLID INDUCTOR	QTL1013
CAPACITORS		
C3402,C3419 (100UF/6.3V)		ACH1396
C3425,C3441 (100UF/6.3V)		ACH1396
C3414-C3416,C3426-C3438		CKSRYF105Z10
C3403-C3410,C3412,C3413		CKSSYF104Z16
C3417,C3418,C3420-C3424		CKSSYF104Z16
C3439,C3440,C3442-C3449		CKSSYF104Z16
RESISTORS		
R3402,R3412		RAB4C101J
R3405-R3407,R3409,R3410		RAB4C220J
R3416,R3417		RAB4C220J
R3425		RS1/16S5601F
Other Resistors		RS1/16S###J
[ADDRESS BLOCK]		
SEMICONDUCTORS		
D3501,D3502		DAN202U
CAPACITORS		
C3501-C3504		CKSSYB102K50
RESISTORS		
R3521,R3522,R3525		RAB4C101J
R3524		RAB4C222J
R3519,R3520		RAB4C472J
Other Resistors		RS1/16S###J
OTHERS		
CN3501-CN3504	40P CONNECTOR	AKM1217
CN3506	40P CONNECTOR	AKM1217
CN3505		VKN1310
[DIGITAL DD CON BLOCK]		
CAPACITORS		
C3609		CKSSYF104Z16
RESISTORS		
R3611		RAB4C101J
Other Resistors		RS1/16S###J

HD LED ASSY

SEMICONDUCTORS		
D1671		SML-311UT
D1672		SML512BC4T
COILS AND FILTERS		
⚠F1671-F1673	CHIP SOLID INDUCTOR	QTL1011

HD IR ASSY

SEMICONDUCTORS		
Q1681		2SC4116
D1681		DA204U
CAPACITORS		
C1681		CEVW470M6R3
C1682		CKSRYB103K50
C1683		CKSSYB102K50
C1684		CKSSYF104Z16
RESISTORS		
All Resistors		RS1/16S###J
OTHERS		
CN1681	3P L TYPE PLUG	KM200NA3L
V1681	REMOTE RECEIVER UNIT	RPM7240-H4

HD AUDIO ASSY

OTHERS		
J3901	1P BOARD IN WIRE	ADX3123
[AUDIO AMP BLOCK]		
SEMICONDUCTORS		
IC3754		BR24L02FJ-W
IC3751		LA4625
IC3752		NJM7809FA
IC3753		NJW1183L
Q3751,Q3754,Q3755,Q3757		2SA1576A
Q3756,Q3759		2SC4081
Q3758,Q3760		DTC124EUA
CAPACITORS		
C3797,C3808,C3812,C3814		CEAT1R0M50
C3775,C3777,C3788,C3790,C3791		CEHAT100M50
C3799		CEHAT100M50
C3761,C3764,C3786,C3798		CEHAT101M16
C3766,C3780,C3783-C3785		CEHAT1R0M50
C3762		CEHAT220M50
C3752,C3753,C3819,C3820		CEHAT2R2M50
C3759		CEHAT331M16
C3757		CEHAT471M25
C3755		CEHAT472M25
C3763		CEHATR47M50
C3754,C3805		CFTLA103J50
C3767,C3770,C3772-C3774		CFTLA104J50
C3781,C3782,C3789,C3792-C3795		CFTLA104J50
C3806,C3807,C3813		CFTLA104J50
C3810		CFTLA223J50
C3778		CFTLA334J50
C3758,C3760,C3796		CKSRYB103K50
C3769,C3815		CKSRYB222K50
C3779		CKSRYB822K50
C3816		CKSRYF104Z16
RESISTORS		
R3768-R3770,R3782		RD1/2MMF2R2J
R3752		RD1/2MMF4R7J
Other Resistors		RS1/16S###J

Mark	No.	Description	Part No.
		OTHERS	
	CN3752	12P PH CONNECTOR	AKM1335
	3771	AUDIO HEATSINK	ANH1636
A	CN3751	3P TOP POST (VH)	B3P-VH
	3772-3775	SCREW	VBB30P100FNI
	KN3751	WRAPPING TERMINAL	VNF1084
	KN3752	WRAPPING TERMINAL	VNF1084
		[ST TERMINAL BLOCK]	
		COILS AND FILTERS	
	⚠L3901,L3902	LINE FILTER	ATF1206
		CAPACITORS	
B	⚠C3906,C3908,C3914,C3916		CCSRCH101J50
	C3903,C3911		CKSRYB332K50
	C3904,C3912		CKSRYF473Z50
		RESISTORS	
	R3901-R3904		RD1/2MMF100J
		OTHERS	
	JA3901	SPEAKER TERMINAL	AKE1061

C

POWER SUPPLY UNIT

POWER SUPPLY Unit has no service part.

D

E

F

6. ADJUSTMENT

1. At shipment, the unit is adjusted to its best conditions. Normally, it is not necessary to readjust even if an assembly is replaced. If the adjustment is shifted or if it becomes necessary to readjust because of part replacement, etc., perform the adjustment as described below.
2. Any value changed in Service/Factory mode will be stored in memory as soon as it is changed. Before readjustment, take note of the original values for reference in case you need to restore the original settings.
3. Use a stable AC power supply.

6.1 ADJUSTMENT REQUIRED WHEN THE SET IS REPAIRED OR REPLACED

■ When any of the following assemblies is replaced

POWER SUPPLY Unit	➡	(Clear the history data on the number of power-ons.) Refer to "7.1.7 HOW TO CLEAR HISTORY DATA."
HD DIGITAL Assy	➡	Writing of backup data is required. Refer to the "7.1.6 BACKUP WHEN THE MAIN UNIT IS ADJUSTED. "
50 X DRIVE Assy	➡	No adjustment required
50 Y DRIVE Assy	➡	No adjustment required
Service Panel	➡	Refer to the "6.3 METHOD FOR REPLACING THE SERVICE PANEL ASSY."
Other assemblies	➡	No adjustment required

■ When any part in the following assemblies is replaced

POWER SUPPLY Unit	➡	The assembly must be replaced as a unit, and no part replacement is allowed.
HD DIGITAL Assy	➡	No adjustment required
50 X DRIVE Assy	➡	No adjustment required
50 Y DRIVE Assy	➡	No adjustment required
Other assemblies	➡	No adjustment required

6.2 RS-232C COMMAND

- The panel control items for the PDP-506PE, PU / PDP-436PE, PU systems can be controlled with the RS-232C commands by connecting a PC through the GGF1475 special communication device when the Media Receiver is not connected with the PDP.

Note: The special communication device for the PDP-503P cannot be used with this unit, because the control lines within the MDR cable are different.

1. Connection

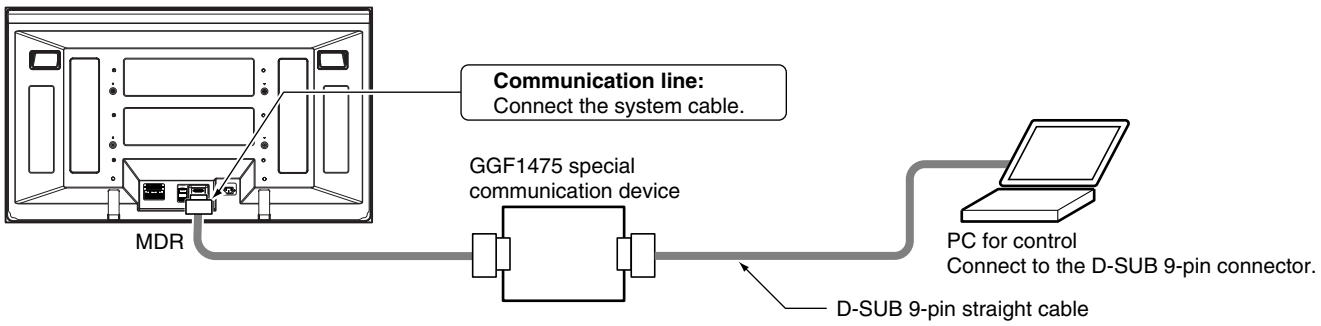

• Schematic diagram of the special communication device

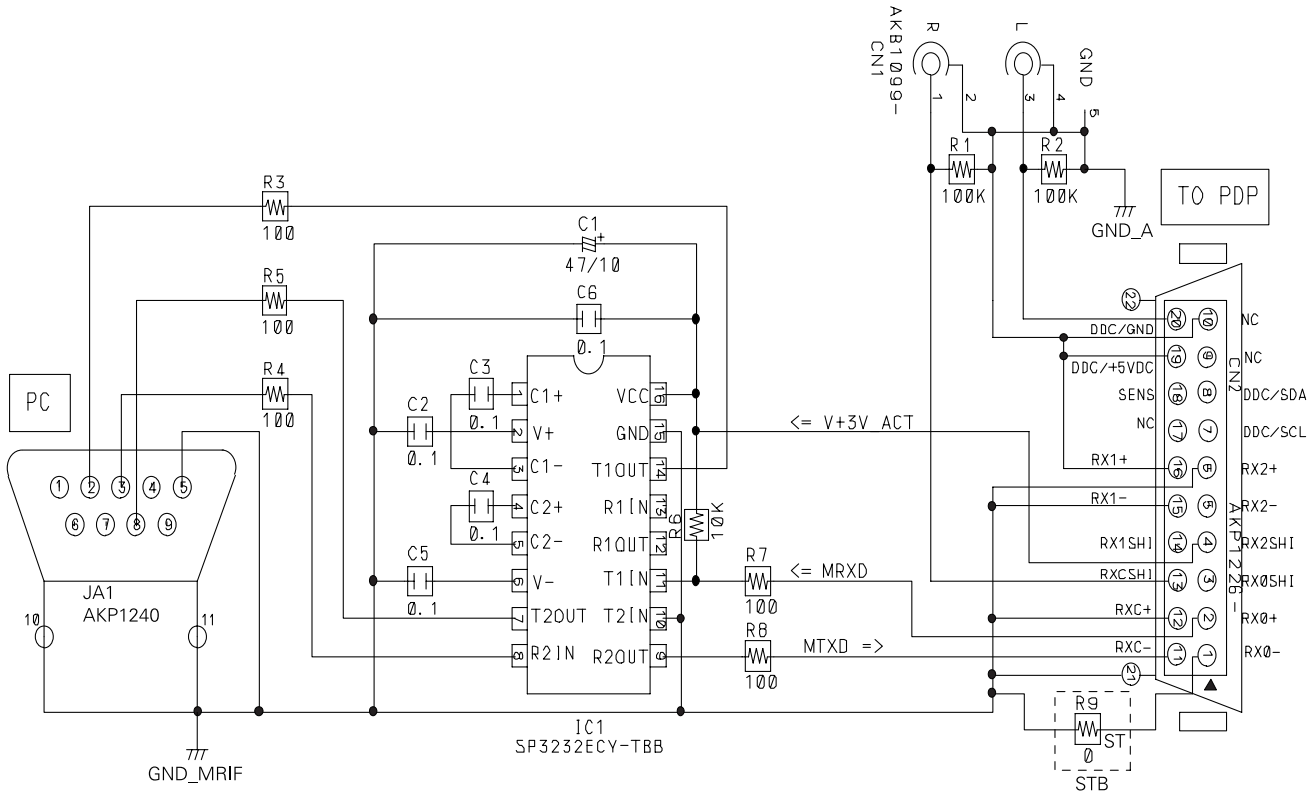

2. Command format

■ Communication protocol

Start bit : 1bit
Data : 8bit
Parity : 0 (none)
Stop bit : 1bit
Baud rate : 38400bps

■ Start and stop conditions

STX (start condition): 0x02
ETX (stop condition): 0x03

■ ID setting

No ID setting (corresponding to all ASCII codes)

■ Acknowledgement (ACK)

- Acknowledgement (ACK) will be sent back when the unit returns to Standby mode for the next command after the process of the received command is finished.
- The return data will be a received command in capital letters, but without an ID.

Example of communication: For a command listed on the command list

MR / External PC

STX	ID	Command	ETX
0x02	**	CBU	0x03

Returns from the PDP

STX	Command	ETX
0x02	CBU	0x03

- If a received command is not one listed on the command list, "ERR" (3 characters) will be sent back.

Example of communication: For a command that is not listed on the command list

MR / External PC

STX	ID	Command	ETX
0x02	**	AAA	0x03

Returns from the PDP

STX	Command	ETX
0x02	ERR	0x03

- If the operation of a received command is not possible in a certain status, "XXX" (3 characters) will be sent back.

Example of communication: If an adjustment command that gives an adjustment value out of the adjustable range is sent

MR / External PC

STX	ID	Adjustment Command	Adjustment Value	ETX
0x02	**	VOL	128	0x03

Returns from the PDP

STX	Command	ETX
0x02	XXX	0x03

■ Error process

If an error is generated between STX and ETX, a return signal will not be issued.

3. Definition of various commands

■ Simple-function command

A simple-function command orders an operation that will conclude by itself, and it consists of 3 characters.

Example of communication:

MR / External PC

STX	ID	Command	ETX
0x02	**	CPD	0x03

Returns from the PDP

STX	Command	ETX
0x02	CPD	0x03

■ Adjustment command and adjustment value

An adjustment command is accompanied by an adjustment value and orders a change in the adjustment value, such as for the contrast adjustment.

- Adjustment command + adjustment value => The attached parameter will be the adjustment value.
- The adjustment value to be attached to an adjustment command consists of 3 characters in decimal, in the range of 000 to 999.

Example of communication:

MR / External PC

STX	ID	Adjustment Command	Adjustment Value	ETX
0x02	**	CNT	128	0x03

Returns from the PDP

STX	Adjustment Command	Adjustment Value	ETX
0x02	CNT	128	0x03

- If the adjustment value of the received command is out of the adjustable range, "XXX" will be sent back, and the adjustment value will not be changed.
- If the adjustment value of the received command is the same as the current adjustment value, the adjustment value will be overwritten, and "XXX" will not be sent back.

■ Setup command and setup value

A setup command is accompanied by a setup value and orders a change in the setup value, such as for the mask setup.

- Setup command + setup value => The attached parameter will be the setup value.
- The setup value to be attached to a setup command consists of 3 characters in decimal, in the range of S00 to S99.

Example of communication:

MR / External PC

STX	ID	Adjustment Command	Adjustment Value	ETX
0x02	**	MKS	S02	0x03

Returns from the PDP

STX	Adjustment Command	Adjustment Value	ETX
0x02	MKS	S02	0x03

- If the setup value of the received command is out of the range, "XXX" will be sent back, and the setup value will not be changed.
- If the setup value of the received command is the same as the current setup value, the setup value will be overwritten, and "XXX" will not be sent back.

■ QUEST (acquiring status) command

If a QUEST command is received from the main unit's microcomputer, data for various adjustment values will be read from memory and sent back. The return data consist of the received command as an echo back, return data, and a checksum.

- Return data: A string of characters defined for each QUEST command is converted into ASCII codes and transmitted.
- The configuration and the data length of return data are defined for individual QUEST commands.

Example of communication:

MR / External PC

STX	ID	QST Command	ETX
0x02	**	QS1	0x03

Returns from the PDP

STX	QST Command	Return Data	Checksum	ETX
0x02	QS1	54AHM2**	7B	0x03

- Checksum (CS): A checksum is used for judging if any error exists in the data sent back from the panel. If an error is detected, it is possible to resend the QUEST command from the MR / External PC to try to acquire data again.

4. RS-232C command for module microcomputer

Command Name		Function		Effective only in Factory mode	Remarks
A					
ABL	***	ABL ADJUSTMENT	Adjusting the upper limit of the power	○	
AMT	S00	AUDIO MUTE OFF	Turning off the audio muting		
	S01	AUDIO MUTE ON	Turning on the audio muting		
APW	S00	APL WB FUNCTION:OFF	WB correction interlocked with APL: OFF	○	
	S01	APL WB FUNCTION:ON	WB correction interlocked with APL: ON	○	
B					
BAL	***	BALANCE ADJUSTMENT	Audio balance adjustment		
BAS	***	BASS ADJUSTMENT	Audio bass adjustment		
BCP		BACKUP COPY	Copying the backup data in the EEPROM	○	
C					
CBU		CLEAR BACKUP	Clearing backup data	○	
CHM		CLEAR HOUR METER	Clearing data of the hour meter	○	Used only when the panel is replaced
CPC		CLEAR POWER ON COUNT	Clearing power-on count data	○	Used only when the power unit is replaced
CPD		CLEAR POWER DOWN	Clearing power-down information	○	Used only when the panel is replaced
CPM		CLEAR PLUSE METER	Clearing data of the pulse meter	○	Used only when the panel is replaced
CSD		CLEAR SHUT DOWN	Clearing shutdown information	○	Used only when the panel is replaced
D					
DRV	S00	DRIVE OFF	Main power off		
	S01	DRIVE ON	Main power on		
E					
ESV	S00	POWER CONTROL NORMAL	Setting Power Consumption mode to 4-split normal curve		
	S01	POWER CONTROL MODE1	Setting Power Consumption mode to 2-split normal curve		
	S02	POWER CONTROL MODE2	Setting Power Consumption mode to 2-split power-saving curve		
	S10	POWER CONTROL NORMAL	Setting Power Consumption mode to 4-split normal curve (domestic)		
	S11	POWER CONTROL MODE1	Setting Power Consumption mode to 2-split normal curve (domestic)		
	S12	POWER CONTROL MODE2	Setting Power Consumption mode to 2-split power-saving curve (domestic)		
F					
FAJ		FINISH ADJUSTMENT	Determining the flag of the HD DIGITAL Assy adjustment in "adjustment is completed"	○	
FAN		FACTRY NO		○	
FAY		FACTRY YES	Entering Factory mode		Turning the mask setting off
FCS	S00	FOCUS OFF	Turning the FOCUS function off		
	S01	FOCUS ON	Turning the FOCUS function on		
M					
MKC	S00	MASK COMBINATION OFF	MASK off		
	S01	MASK COMBINATION 01	H ramp (slant 1) M	○	
	S02	MASK COMBINATION 02	H ramp (slant 4) M	○	
	S03	MASK COMBINATION 03	Slanting ramp M	○	
	S04	MASK COMBINATION 04	30 for aging	○	
	S05	MASK COMBINATION 05	05 for aging	○	
	S06	MASK COMBINATION 06	Erasing afterimage 1	○	
	S07	MASK COMBINATION 07	Erasing afterimage 2 (RGB: zigzag, V: reverse)	○	
	S08	MASK COMBINATION 08	White (change in luminance level)	○	
	S09	MASK COMBINATION 09	PEAK SEEK RASTER	○	
MKS	S00	MASK SINGLE OFF	MASK OFF		
	S01	MASK SINGLE 1	H ramp (slant 1)	○	
	S02	MASK SINGLE 2	H ramp (slant 4)	○	
	S03	MASK SINGLE 3	V ramp (slant 1)	○	
	S04	MASK SINGLE 4	Slanting ramp	○	

Command Name		Function		Effective only in Factory mode	Remarks
MKS	S05	MASK SINGLE 5	Window(Hi=870Lo=102)	O	
	S06	MASK SINGLE 6	Window(Hi=1023Lo=102)	O	
	S07	MASK SINGLE 7	Window(Hi=1023)	O	
	S08	MASK SINGLE 8	Window(Hi=1023)4%	O	
	S09	MASK SINGLE 9	Window(Hi=1023)1.25%	O	
	S10	MASK SINGLE 10	Window(1/7LINE)	O	
	S11	MASK SINGLE 11	STRIPE(MGT/GRN)	O	
	S12	MASK SINGLE 12	STRIPE(GRN/MGT)	O	
	S13	MASK SINGLE 13	B & W, checker (1 line)	O	
	S14	MASK SINGLE 14	B & W, checker (2 lines)	O	
	S15	MASK SINGLE 15	B & W, checker (4 lines)	O	
	S16	MASK SINGLE 16	B & W, checker (8 lines)	O	
	S17	MASK SINGLE 17	COLOR BAR	O	
	S18	MASK SINGLE 18	Slanting lines	O	
	S19	MASK SINGLE 19	Red & black, checker (1 line)	O	
	S20	MASK SINGLE 20	Red & black, checker (2 lines)	O	
	S21	MASK SINGLE 21	Red & black, checker (4 ines)	O	
	S22	MASK SINGLE 22	Red & black, checker (8 lines)	O	
	S23	MASK SINGLE 23	RGB zigzag, V reverse	O	
	S24	MASK SINGLE 24	SUS 2000 pulses (black raster)	O	
	S25	MASK SINGLE 25	Window(Hi=870Lo=102) PATTAN3	O	
	S26	MASK SINGLE 26	Window(Hi=1023Lo=102) PATTAN3	O	
	S27	MASK SINGLE 27	Window(Hi=1023) Pattern 3	O	
	S28	MASK SINGLE 28	Window(Hi=1023)4% Pattern 3	O	
	S29	MASK SINGLE 29	Window(Hi=1023)1.25% Pattern 3	O	
	S30	MASK SINGLE 30	Window(1/7LINE) Pattern 3	O	
	S51	MASK SINGLE 51	Raster - White	O	
	S52	MASK SINGLE 52	Raster - Red	O	
	S53	MASK SINGLE 53	Raster - Green	O	
	S54	MASK SINGLE 54	Raster - Blue	O	
	S55	MASK SINGLE 55	Raster - Black	O	
	S56	MASK SINGLE 56	Raster - Cyan	O	
	S57	MASK SINGLE 57	Raster - Magenta	O	
	S58	MASK SINGLE 58	Raster - Yellow	O	
	S59	MASK SINGLE 59	Raster - Cyan 460 :W	O	
	S60	MASK SINGLE 60	Raster - Green 774 :W	O	
	S61	MASK SINGLE 61	Raster - Gray 912 :W	O	
	S62	MASK SINGLE 62	Raster - Yellow egg color: W	O	
	S63	MASK SINGLE 63	Raster - Beige: W	O	
	S64	MASK SINGLE 64	Raster - Sky color: W	O	
	S65	MASK SINGLE 65	Raster - Pale purple: W	O	
	S66	MASK SINGLE 66	Raster - Magenta 54 :W	O	
	S67	MASK SINGLE 67	Raster - Red 588	O	
	S68	MASK SINGLE 68	Red 1023 + α	O	
	S69	MASK SINGLE 69	Green 1023 + α	O	
	S70	MASK SINGLE 70	Blue 1023 + α	O	
	S71	MASK SINGLE 71	Red 588 + α	O	
	S72	MASK SINGLE 72	Green 588 + α	O	
	S73	MASK SINGLE 73	Blue 588 + α	O	

Command Name		Function		Effective only in Factory mode	Remarks
MKS	S74	MASK SINGLE 74	Raster -Gray 512 (reservation)	○	
P					
PAV	S**	PANEL AV MODE	Switching panel functions interlocked with the AV selection		
PBH	***	PANEL BLUE HIGH	Panel white balance adjustment - Blue highlight	○	
PBL	***	PANEL BLUE LOW	Panel white balance adjustment - Blue low light	○	
PDM	S00	PD MUTE OFF	Passing PD signals to the Power SUPPLY Unit => Power-down		
	S01	PD MUTE ON	Not passing PD signals to the Power SUPPLY Unit => No power-down		
PFN		FACTORY NO	Factory mode: off	○	
PFS		PANEL FINAL SETUP	Setup at shipment	○	
PFY		FACTORY YES	Factory mode: on		
PGH	***	PANEL GREEN HIGH	Panel white balance adjustment - Green highlight	○	
PGL	***	PANEL GREEN LOW	Panel white balance adjustment - Green low light	○	
PGM	S**	PANEL GAMMA	Setting of the gamma table		
PMT	S00	MUTE OFF	Canceling panel muting		
	S01	MUTE ON	Panel muting		
POF		POWER OFF	Power off		
PON		POWER ON	Power on		
PPT	S00	PANEL PROTECT OFF	Panel protection: off	○	
	S01	PANEL PROTECT ON	Panel protection: on	○	
PUC	S00	PUER CINEMA:OFF	Pure cinema: off		
	S01	PUER CINEMA:STD	Pure cinema: standard		
	S02	PUER CINEMA:ADV	Pure cinema: advanced		
Q					
QAJ		QUEST ADJUSTMENT	Acquiring various adjustment values		
QIP		QUEST PANEL INFORMATION	Acquiring various input signal data		
QPD		QUEST POWER-DOWN	Acquiring logs of power-down points		
QPM		QUEST PULSE METER	Acquiring data of the pulse meter		
QPW		QUEST PANEL WHITE BALANCE	Acquiring panel white balance adjustment values		
QS1		QUEST STATUS 1	Acquiring data on the unit, such as the version of the program		
QS2		QUEST STATUS 2	Acquiring data on the status of the unit, such as temperature		
QSD		QUEST SHUT DOWN	Acquiring data on shutdown		
QSI		QUEST SIGNAL INFORMATION	Acquiring data related with signals		
R					
RBL	S**	PANEL REVISE BLUE LEVEL	Setting of blue level for panel degradation correction	○	
RGL	S**	PANEL REVISE GREEN LEVEL	Setting of green level for panel degradation correction	○	
RHI	***	RED HIGH	User white balance - Red highlight		
RLW	***	RED LOW	User white balance - Red low light		
RRL	S**	PANEL REVISE RED LEVEL	Setting of red level for panel degradation correction	○	
RSW	***	XY-RST-W ADJ	Adjustment of the width of XY reset pulse	○	
S					
SDM	S00	SD MUTE OFF	Shutdown enabled		
	S01	SD MUTE ON	Shutdown prohibited		
SFR	S01	SUS FREQUENCY MODE1	Measures against AM radio noise - Pattern 1	○	
	S02	SUS FREQUENCY MODE2	Measures against AM radio noise - Pattern 2	○	
	S03	SUS FREQUENCY MODE3	Measures against AM radio noise - Pattern 3	○	
	S04	SUS FREQUENCY MODE4	Measures against AM radio noise - Pattern 4	○	
	S05	SUS FREQUENCY MODE5	Measures against AM radio noise - Pattern 5	○	
	S06	SUS FREQUENCY MODE6	Measures against AM radio noise - Pattern 6	○	
	S07	SUS FREQUENCY MODE7	Measures against AM radio noise - Pattern 7	○	

Command Name		Function		Effective only in Factory mode	Remarks
SFR	S08	SUS FREQUENCY MODE8	Measures against AM radio noise - Pattern 8	○	
SMM	S**	SIDE MASK MODE	Setting of the effective area during streaking correction	○	
SN0	***	SERIAL NO 0	Setting of the serial No. 0 (panel)	○	
SN1	***	SERIAL NO 1	Setting of the serial No. 1 (panel)	○	
SN2	***	SERIAL NO 2	Setting of the serial No. 2 (panel)	○	
SN3	***	SERIAL NO 3	Setting of the serial No. 3 (panel)	○	
SN4	***	SERIAL NO 4	Setting of the serial No. 4 (panel)	○	
SRS	S00	SRS OFF	SRS function: off		
	S01	SRS ON	SRS function: on		
SYS	S00	SYSTEM CABLE NO	Prohibiting monitoring of cable disconnection detection		
	S01	SYSTEM CABLE YES	Permitting monitoring of cable disconnection detection		
T					
TBS	S00	TRUBASS OFF	TruBass function: off		
	S01	TRUBASS ON	TruBass function: on		
TRE	***	TREBLE ADJUSTMENT	Audio treble adjustment		
U					
UAJ		UN-ADJUSTMENT	Determining the flag for the HD DIGITAL Assy adjustment in "not adjusted"	○	
V					
VFQ	S01	FREQENCY VIDEO 48Hz	Setting the frequency in Mask mode to VD-48 Hz	○	
	S02	FREQENCY VIDEO 50Hz	Setting the frequency in Mask mode to VD-50 Hz	○	
	S03	FREQENCY VIDEO 60Hz	Setting the frequency in Mask mode to VD-60 Hz	○	
	S05	FREQENCY THEATER 72Hz	Setting the frequency in Mask mode to VD-72 Hz	○	
	S06	FREQENCY 75Hz	Setting the frequency in Mask mode to VD-75 Hz	○	
	S13	FREQENCY PC 60Hz	Setting the frequency in Mask mode to PC-60 Hz	○	
	S14	FREQENCY PC 70Hz	Setting the frequency in Mask mode to PC-70 Hz	○	
	S22	FREQENCY VIDEO 50Hz NONSTD	Setting the frequency in Mask mode to VD-50 Hz (nonstandard)	○	
	S23	FREQENCY VIDEO 60Hz NONSTD	Setting the frequency in Mask mode to VD-60 Hz (nonstandard)	○	
	S25	FREQENCY VIDEO 72Hz NONSTD	Setting the frequency in Mask mode to VD-72 Hz (nonstandard)	○	
	S26	FREQENCY VIDEO 75Hz NONSTD	Setting the frequency in Mask mode to VD-75 Hz (nonstandard)	○	
VOF	***	Vofs ADJUSTMENT	Adjustment of the reference value of Vofs voltage	○	
VOL	***	VOLUME	Audio volume adjustment		
VRP	***	Vrp ADJUSTMENT	Adjustment of the reference value of Vrst-p voltage	○	
VSU	***	Vsus ADJUSTMENT	Adjustment of the reference value of Vsus voltage	○	
W					
WBI	S00	WB INITIALIZE NO	Panel WB standard output mode: off	○	
WBI	S01	WB INITIALIZE YES	Panel WB standard output mode: on	○	
X					
XSB	***	X-SUS-B ADJ	X-SUS-B ADJ	○	
Y					
YSB	***	Y-SUS-B ADJ	Y-SUS-B ADJ	○	
YTG	***	Y-SUSTAIL ADJ	Y-SUSTAIL ADJ	○	
YTW	***	Y-SUSTAIL W AJD	Y-SUSTAIL W AJD	○	

5. QUEST commands (for acquiring status)

With a QUEST command, data on STBY/ON, PD, and SD can be obtained while the unit is on.

■ Acquisition of panel statuses • • • [QS1]

The command QS1 is for acquiring data necessary for authentication of both the main unit's microcomputer and the module's microcomputer.

Command Format	Effective Operation Modes	Function	Remarks
[QS1]	All operations	To acquire data on product status	Return data: 3 (ECO)+43(DATA)+2(CS)=48Byte

Data Arrangement		Data Length	Output Example
ECO		3Byte	QS1
1	Resolution/size	1Byte	5
2	Generation	1Byte	6
3	Destination	1Byte	*
4	Grade	1Byte	*
5	Product type	1Byte	S
6	MDUcom-Boot	3Byte	01A
7	MDUcom-PRG	8Byte	001SM "space × 3"
8	SEQUENCE PROCESSOR-Boot	3Byte	01A
9	SEQUENCE PROCESSOR-Boot	8Byte	001AM "space × 3"
10	SQ-VIDEO(43/42)	4Byte	001X
11	SQ-PC(43/42)	4Byte	001X
12	SQ-VIDEO(50/61)	4Byte	001W
13	SQ-PC(50/61)	4Byte	001W
CS		2Byte	7B

● Resolution/size	
4	1024*768-43
5	1280*768-50

● Generation	
6	G6

● Destination	
*	Common

● Grade	
*	Common

● MDUcom/SEQUENCE PROCESSOR-Boot • • • 3Byte		
1st character		Representing the boot version in 2-digit decimal
2nd character		
3rd character	A	When the boot version is common to 43/50
	X	When the boot version is only for 43
	W	When the boot version is only for 50

● Product type	
S	System model

● MDUcom/SEQUENCE PROCESSOR-PRG • • • 8Byte		
1st character	–	For a mass-production product
2nd character		For representing the version in 2-digit decimal
3rd character		
4th character	A	When the program is common to 43/50 (for SEQUENCE PROCESSOR)
	S	When the program is only for another unit (for MDUcom)
5th character	M	Fixed
6th character		Reservation
7th character		Reservation
8th character		Reservation

● SEQUENCE-Data • • • 8Byte		
1st - 3rd characters	Num	For representing the version in 3-digit decimal
4th character	W	When the sequence data are only for 50
	X	When the sequence data are only for 43

• For the version indication, the bytes reserved for special use must be replaced with spaces if they are not used.

■ Acquisition of panel operation data • • • [QS2]

The command QS2 is for acquiring data on the panel's operations. Basically, this command is used for the module's microcomputer to inform the main unit's microcomputer of changes in panel operation.

Command Format	Effective Operation Modes	Function	Remarks
[QS2]	All operations	To acquire data on operations of the panel	Return data: 3 (ECO)+23(DATA)+2(CS)=28Byte

Data Arrangement		Data Length	Output Example
ECO		3Byte	QS2
1	Notification of mode shifting to STB	1Byte	1
2	Flag for adjustment of the main unit	1Byte	0
3	Flag for adjustment-data backup	1Byte	0
4	"1st PD" data	1Byte	0
5	"2nd PD" data	1Byte	0
6	Reservation	3Byte	***
7	Temperature data (TEMP 1)	3Byte	128
8	SD main data	1Byte	0
9	SD subdata	1Byte	0
10	Operation status induced by SD	1Byte	0
11	Data from the hour meter	8Byte	00000259
12	MASK indication	1Byte	0
CS		2Byte	4A

Note : "00000259" of "Data from the hour meter" means 2 hours 59 minuts.

● Notification of mode shifting to Standby	
0	Entering Standby mode failed
1	Entering Standby mode succeeded

● Adjustment of the main unit	
0	Adjustment completed
1	Adjustment not completed

● Adjustment-data backup	
0	With backup data
1	No data

● PD data	
0	No PD data
1	Not used
2	POWER
3	SCAN
4	SCN-5V
5	Not used
6	Y-DCDC
7	Y-SUS
8	ADRS
9	X-DRV
A	X-DCDC
B	X-SUS
C	Not used
D	SQ-IC
E	Not used
F	Specification inability

● SD main data	
0	No SD
1	SQ-IC
2	MDU-IIC
3	RST2
4	Panel having high temperature
5	Short-circuited speaker

● SD subdata (IIC)	
0	No SD subdata
1	EEPROM
2	BACKUP
3	DAC
4	VOL IC
5	DVI

● Operation status induced by SD	
0	Normal
1	Relay-off completed
2	During warning indication

● MASK indication	
0	MASK-OFF
1	MASK-ON

■ Acquisition of other data on the panel • • • [QIP]

The command QIP is for acquiring data other than those available with QS1 (data necessary before turning the power on) and QS2 (data to inform of operational status change).

Command Format	Effective Operation Modes	Function	Remarks
[QIP]	All operations	To acquire data on operations of the panel	Return data: 3 (ECO)+39(DATA)+2(CS)=44Byte

Data Arrangement		Data Length	Output Example
ECO		3Byte	QIP
1	SERIAL	15Byte	_ _ _ _ _ _ _ _ _ _ _ _ _ _ _
2	HOUR METER	8Byte	00000000
3	BACKUP HR MTR	8Byte	00000000
4	PON COUNTER	8Byte	00000000
CS		2Byte	94

Note : The real product serial number is displayed in "SERIAL".

■ Acquisition of panel adjustment data (common data) • • • [QAJ]

The command QAJ is for acquiring data on the panel's factory-preset items that are common to the main unit and that share the same memory.

Command Format	Effective Operation Modes	Function	Remarks
[QAJ]	All operations	To acquire data on operations of the panel	Return data: 3 (ECO)+27(DATA)+2(CS)=32Byte

Data Arrangement		Data Length	Output Example
ECO		3Byte	QAJ
1	V-SUS adjustment value	3Byte	128
2	V-OFT adjustment value	3Byte	128
3	V-RST-P adjustment value	3Byte	128
4	XSB adjustment value	3Byte	128
5	YSB adjustment value	3Byte	128
6	YTG adjustment value	3Byte	128
7	YTW adjustment value	3Byte	128
8	RSW adjustment value	3Byte	128
9	R-RIVISE setting value	1Byte	0
10	G-RIVISE setting value	1Byte	0
11	B-RIVISE setting value	1Byte	0
CS		2Byte	B7

■ Acquisition of ABL/WB adjustment data • • • [QPW]

The command QPW is for acquiring data on the panel's factory-preset items whose memory tables are changed in sequence.

Command Format	Effective Operation Modes	Function	Remarks
[QPW]	All operations	To acquire data on operations of the panel	Return data: 3 (ECO)+35(DATA)+2(CS)=40Byte

Data Arrangement		Data Length	Output Example
ECO		3Byte	QPW
1	Drive sequence	3Byte	60V
2	Standard/nonstandard	1Byte	S
3	Type of ABL/WB tables	2Byte	T2
4	ABL adjustment value	3Byte	128
5	R-HIGH adjustment value	3Byte	256
6	G-HIGH adjustment value	3Byte	256
7	B-HIGH adjustment value	3Byte	256
8	R-LOW adjustment value	3Byte	512
9	G-LOW adjustment value	3Byte	512
10	B-LOW adjustment value	3Byte	512
11	Gamma setting	1Byte	A
12	Streaking correction	1Byte	1
13	Peripheral luminance correction	1Byte	0
14	Reservation	1Byte	*
15	WB interlocked with APL	1Byte	0
16	Transition of protective operations	1Byte	0
17	Reservation	2Byte	**
CS		2Byte	37

● Drive sequence

48V	Video48 Hz
50V	Video50 Hz
60V	Video60 Hz
72V	Video72 Hz
75V	Video75 Hz
60P	PC60Hz
70P	PC70Hz

● Standard/ nonstandard

S	Standard
N	Nonstandard

● Gamma setting

n	0 to F

● Setting for Items 12 and 15

0	OFF
1	ON

● Peripheral luminance correction

0	OFF
2	ON (interlocked with APL)

● Transition of brightness by protective operations

0	Upper limit state for brightness
1	Brightness being reduced
2	Lower limit state for brightness
3	Brightness being increased

● Type of ABL/WB tables

Tn	n: 1 to 4

■ Acquisition of parameters • • • [QPM]

The command QPM is for acquiring the accumulated number of pulses for each of 5 blocks from the EEPROM.

Command Format	Effective Operation Modes	Function	Remarks
[QPM]	All operations	To acquire data on operations of the panel	Return data: 3 (ECO)+40(DATA)+2(CS)=45Byte

Data Arrangement		Data Length	Output Example
ECO		3Byte	QPM
1	Pulse meter B 1	8Byte	00000000
2	Pulse meter B 2	8Byte	00000000
3	Pulse meter B 3	8Byte	00000000
4	Pulse meter B 4	8Byte	00000000
5	Pulse meter B 5	8Byte	00000000
CS		2Byte	E7

• The output data on the accumulated number of pulses for each block are calculated in the following way: the high-order 4 bytes of the accumulated number of pulses for each block are converted into a decimal number, and the high-order 8 digits are transmitted. The unit of each block is M_pulse (mega).

■ Acquisition of PD logs • • • [QPD]

The command QPD is for acquiring data from the 8 latest power-down (PD) logs.

Command Format	Effective Operation Modes	Function	Remarks
[QPD]	All operations	To acquire data on the power-down logs	Return data: 3 (ECO)+80(DATA)+2(CS)=85Byte

Data Arrangement		Data Length	Output Example
ECO		3Byte	QPD
1	Latest "1st PD" data	1byte	A
2	Latest "2nd PD" data	1byte	2
3	Data from the hour meter for the latest PD	8byte	00010020
4	Second latest "1st PD" data	1byte	E
5	Second latest "2nd PD" data	1byte	9
6	Data from the hour meter for the second latest PD	8byte	00008523
7	Third latest "1st PD" data	1byte	4
8	Third latest "2nd PD" data	1byte	3
9	Data from the hour meter for the third latest PD	8byte	00004335
10	Fourth latest "1st PD" data	1byte	2
11	Fourth latest "2nd PD" data	1byte	0
12	Data from the hour meter for the fourth latest PD	8byte	00000945
13	Fifth latest "1st PD" data	1byte	4
14	Fifth latest "2nd PD" data	1byte	0
15	Data from the hour meter for the fifth latest PD	8byte	00000715
16	Sixth latest "1st PD" data	1byte	A
17	Sixth latest "2nd PD" data	1byte	2
18	Data from the hour meter for the sixth latest PD	8byte	00000552
19	Seventh latest "1st PD" data	1byte	A
20	Seventh latest "2nd PD" data	1byte	0
21	Data from the hour meter for the seventh latest PD	8byte	00000213
22	Eighth latest "1st PD" data	1byte	D
23	Eighth latest "2nd PD" data	1byte	0
24	Data from the hour meter for the eighth latest PD	8byte	000001A7
CS		2Byte	27

● PD data	
0	No PD
1	Not used
2	P-POWER
3	SCAN
4	SCN-5V
5	Not used
6	Y-DCDC
7	Y-SUS
8	Address
9	X-DRIVE
A	X-DCDC
B	X-SUS
C	DIG-DCDC
D	QS (driving stopped)
E	Not used
F	Specification inability

■ Acquisition of SD logs • • • [QSD]

The command QSD is for acquiring the data from the 8 latest shutdown (SD) logs.

Command Format	Effective Operation Modes	Function	Remarks
[QSD]	All operations	To acquire data on the shutdown logs	Return data: 3 (ECO)+80(DATA)+2(CS)=85Byte

Data Arrangement		Data Length	Output Example
ECO		3Byte	QSD
1	Latest SD data	1byte	1
2	Latest SD subcategory data	1byte	0
3	Data from the hour meter for the latest SD	8byte	00752013
4	Second latest SD data	1byte	5
5	Second latest SD subcategory data	1byte	0
6	Data from the hour meter for the second latest SD	8byte	00495204
7	Third latest SD data	1byte	2
8	Third latest SD subcategory data	1byte	3
9	Data from the hour meter for the third latest SD	8byte	00100355
10	Fourth latest SD data	1byte	2
11	Fourth latest SD subcategory data	1byte	5
12	Data from the hour meter for the fourth latest SD	8byte	00075620
13	Fifth latest SD data	1byte	1
14	Fifth latest SD subcategory data	1byte	0
15	Data from the hour meter for the fifth latest SD	8byte	00000852
16	Sixth latest SD data	1byte	2
17	Sixth latest SD subcategory data	1byte	5
18	Data from the hour meter for the sixth latest SD	8byte	000000451
19	Seventh latest SD data	1byte	0
20	Seventh latest SD subcategory data	1byte	0
21	Data from the hour meter for the seventh latest SD	8byte	00000000
22	Eighth latest SD data	1byte	0
23	Eighth latest SD subcategory data	1byte	0
24	Data from the hour meter for the eighth latest SD	8byte	00000000
CS		2Byte	7D

● SD data	
0	No SD
1	SQ-IC
2	MDU-IIC
3	RST2
4	Panel having high temperature
5	Short-circuited speaker

● SD subcategory	
0	No SD subcategory
1	EEPROM
2	BACKUP
3	DAC
4	VOL-IC
5	DVI
6	Not used

■ Acquisition of input signal data • • • [QSI]

The command QSI is for acquiring all data on input video signals.

Command Format	Effective Operation Modes	Function	Remarks
[QSI]	All operations	To acquire all data on input video signals	Return data: 3 (ECO)+66(DATA)+2(CS)=71Byte

Data Arrangement		Data Length	Output Example
ECO		3Byte	QSI
1	Type of drive sequence	3byte	60V
2	Standard/nonstandard	1byte	S
3	Type of ABL/WB tables	2byte	T1
4	Total value of PCN	4byte	0256
5	Total value of PRH	4byte	0256
6	Total value of PGH	4byte	0256
7	Total value of PBH	4byte	0256
8	Total value of PBR	4byte	0512
9	Total value of PRL	4byte	0512
10	Total value of PGL	4byte	0512
11	Total value of PBL	4byte	0512
12	Reservation	2byte	**
13	Detection of existence of H	1byte	Y
14	Detection of V frequency	4byte	6002
15	Reservation	4byte	****
16	Obtained APL data	4byte	1023
17	Number of SUS pulses	4byte	0457
18	Result of detection of still picture	1byte	1
19	Result of detection of cracking in the panel	1byte	1
20	Result of detection for scanning protection	1byte	1
21	Result of detection for external protection	1byte	1
22	Transition of protection operation	1byte	0
23	Reservation	4byte	****
CS		2Byte	27

● Detection of existence of H	
N	No H
Y	H detected

● Transition of brightness by protection operation	
0	Upper limit state for brightness
1	Brightness being reduced
2	Lower limit state for brightness
3	Brightness being increased

- If data for an item cannot be obtained during Standby mode, the return data for that item will be "*."
- The types of data for Items 1-3 in the table (drive sequence, standard/nonstandard, and type of ABL/WB tables) are the same as with the command QPW.
- Each total value for Items 4-11 represents that of panel WB, user WB, and degradation correction, and the actual data being sent to the ASTRA are output.
- Detection of V frequency: The V signal input to the panel is measured in the range of 30.51 to 99.99 Hz. The measured value is multiplied by 100 and then output.
- Number of SUS pulses : The number is calculated from data from APL and the drive sequence. The output value must be between 0174 and 2752.
- APL value: The APL value for the input video signal (or mask indication) will be output in the range of 0000 to 1023.

■ Setting for Factory mode permission/prohibition • • • [FAY/FAN] [PFY/PFN]

The commands FAY/FAN and PFY/PFN are for prohibiting/permitting panel-adjustment commands during normal operation and are to be used to avoid accidental change of panel adjustment values.

Command Format	Operation		Remarks
	Effective Operation Modes	Control (by the microcomputer itself)	
[FAY]	Normal operation mode while the power is on	Adjustment mode: ON	Mask indications will be forcibly turned off.
[PFY]			With a PFY command, the mask does not change.
[FAN]	During FAY	Adjustment mode: OFF	
[PFN]			

• Commands that are effective during normal operation will also be effective during FAY (PFY) mode.

Note:

• The functions shown below will be forcibly switched when Mask ON/OFF is switched. (Even if the panel is off, changed settings will be retained.)
While the status of Mask ON or OFF is maintained, if settings for the individual functions shown in ① and ② are changed, those settings are retained (even if the drive frequency is changed).

① Functions related to picture quality

Function	Setting while Mask is ON	Setting while Mask is OFF	Remarks
Peripheral luminance correction	OFF	ON	
WB correction interlocked with APL	OFF	ON	
Streaking correction	OFF	ON	

② Functions related to panel protection

Function	Setting while Mask is ON	Setting while Mask is OFF	Remarks
Detection of still picture	OFF	ON	
Detection of cracking in the panel	OFF	ON	
Scanning protection	OFF	ON	

• Depending on the type of mask displayed, phosphor burn of the panel may occur. As the panel-protection function is forcibly turned off with this model, care must be taken when color-bar signals are to be displayed for an extended period.

■ Backup function for adjustment values for the main unit • • • [FAJ/UAJ/CBU/BCP]

When the HD DIGITAL Assy is to be replaced, adjustment values can be copied from the backup EEPROM to the EEPROM of the Assy for service.

Command Format	Operation			Remarks
	Effective Operation Modes	Control (by the microcomputer itself)		
[FAJ]	During FAY	To make the flag setting that indicating that adjustment of the main unit has been completed	Writing 00 to the 4-kbyte ROM and copying to the 2-kbyte ROM	This takes at least 350 ms.
[UAJ]		To make the flag setting that indicating that adjustment of the main unit has not been completed	Writing F0 to the 4-kbyte ROM	
[CBU]		To make the flag setting that indicating that backup data have not been copied	Writing F0 to the 2-kbyte ROM	The backup ROM is initialized.
[BCP]		To make the flag setting that indicating that backup data have been copied	Copying backup data	

When the flag indicating that the line adjustments (SUS waveform, voltage margin, and panel WB) for the main unit have been completed is set to on, data stored from Addresses 0x0000 to 0X00FF in the digital EEPROM are copied to the same addresses of the backup EEPROM. Copying will be executed immediately before the relay of normal operation is off.

- When the command BCP is received while a warning indicating that backup copying has not been completed is displayed (conditions: main EEPROM = not adjusted, and backup EEPROM = adjusted), backed-up data will be copied to the main EEPROM, and various adjustment values related to Factory mode will be readjusted. Then LED warning indication will be shut off, and normal LED indication will be restored.

- If the backup EEPROM has not been adjusted when the command BCP is received (0x0063 is not written to all three addresses of the key data), copying of the backup data is not possible, and "XXX" is returned.

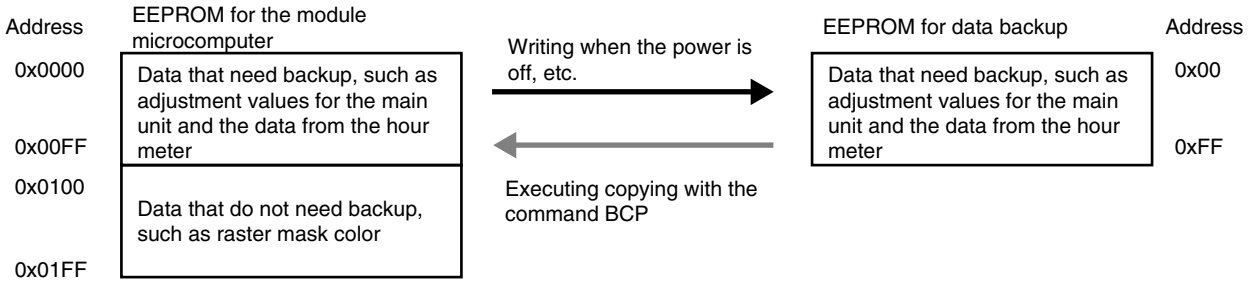

Note:

- When the command FAJ, UAJ, or CBU is executed, only high-order one-byte (0x00 or 0xF0) key data will be written to the EEPROM, and lower-order one-byte (0x63) data will not be changed.
- It takes at least 350 ms from reception of the command FAJ until an echo is sent back, because data are copied to the backup EEPROM.

■ Factory presetting • • • [PFS]

Command Format	Operation			Remarks
	Effective Operation Modes	Control (by the microcomputer itself)		
[PFS]	During FAY	Initialized to factory-preset values		

- When this command is executed, the values not stored in the EEPROM are initialized, mask indication is set to OFF, control of the power for line aging is set to OFF, and detection of the system cable is set to ON.

6.3 METHOD FOR REPLACING THE SERVICE PANEL ASSY

When the Panel Assy is replaced with one for service, the following adjustments are required:

■ Adjustments of Vofs voltage and Vyprst voltage

Enter the reference adjustment values for the Vofs voltage and Vyprst voltage that are written on the label attached to the panel for service.

Note: Enter the values, using an RS-232C command or the Factory Menu.

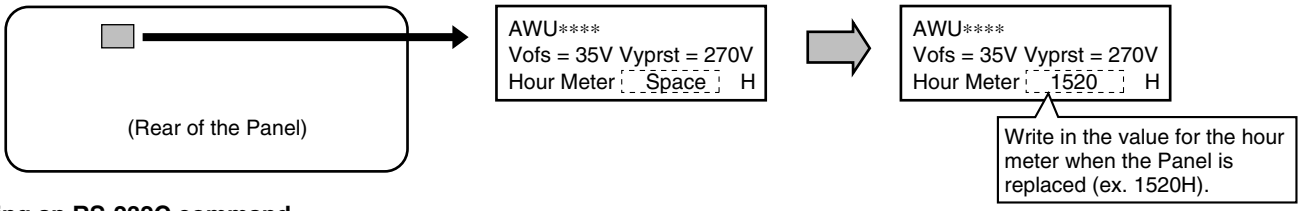

Using an RS-232C command

Enter a "PFY" command with Factory mode ON.

Convert the adjustment voltage values written on the label attached at the rear of the Panel to an input command, referring to the conversion chart. (See the next page.)

- Reference adjustment of the Vofs voltage: Ex. "Vofs = 35" → (Check the conversion chart.) Enter "VOF112."
- Reference adjustment of the Vyprst voltage: Ex. 50-inch "Vyprst = 270 V" → (Check the conversion chart.) Enter "VRP055." (Note that the conversion charts for 50-inch and 43-inch Panels are different.)

Using the Factory Menu

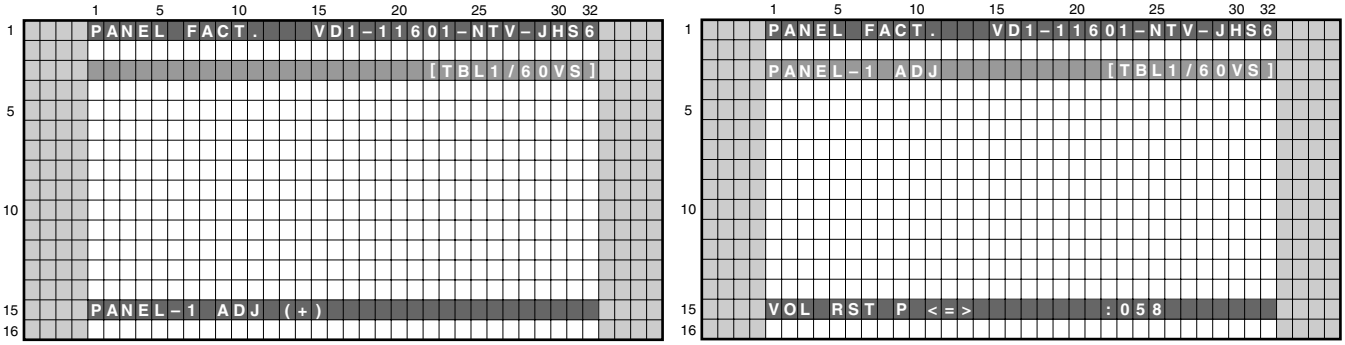

Select the main item "PANEL FACT." by pressing the MUTE key then enter Panel Factory mode by pressing the SET key.
Using the ▲/▼ keys, select "PANEL-1 ADJ" then press the SET key to enter the next lower nested layer.
Select "VOL-OFFSET" or "VOL RST P" then enter a command value converted from the voltage value, using the ◄/► keys.

■ Clearing data on various histories of the Panel, such as those on the hour meter

- It is necessary to clear the data on the hour meter, etc. to match them to the actual driving hours of the Panel.
- It is also necessary to clear the data on SD and PD, because the accumulated power-on time when a shutdown or power-down occurred is recorded.

Note: Clear the values, using an RS-232C command or the Factory Menu.
There are two types of hour meters. Do not take the MR hour meter for the hour meter.

Using an RS-232C command

To acquire the accumulated power-on time of the product itself, use the "GS2" RS-232C command.

1 To clear the data on the hour meter (for the Panel) : CHM
2 To clear the data on the pulse meter : CPM
3 To clear the data on the SD history : CSD
4 To clear the data on the PD history : CPD

Using the Factory Menu

See "7.1.7 HOW TO CLEAR HISTORY DATA."

■ Conversion charts for electronic VRs: Conversion chart for the Vofs

Conversion chart for the Vofs (Commands vs. Common voltage values for the 50-inch and 43-inch models)

Command	Voltage value [V] for common sizes	Command	Voltage value [V] for common sizes	Command	Voltage value [V] for common sizes	Command	Voltage value [V] for common sizes	Command	Voltage value [V] for common sizes
VOF000	14.09	VOF056	24.55	VOF112	35.01	VOF168	45.47	VOF224	55.93
VOF001	14.28	VOF057	24.74	VOF113	35.20	VOF169	45.66	VOF225	56.12
VOF002	14.46	VOF058	24.92	VOF114	35.38	VOF170	45.85	VOF226	56.31
VOF003	14.65	VOF059	25.11	VOF115	35.57	VOF171	46.03	VOF227	56.49
VOF004	14.84	VOF060	25.30	VOF116	35.76	VOF172	46.22	VOF228	56.68
VOF005	15.02	VOF061	25.48	VOF117	35.95	VOF173	46.41	VOF229	56.87
VOF006	15.21	VOF062	25.67	VOF118	36.13	VOF174	46.59	VOF230	57.05
VOF007	15.40	VOF063	25.86	VOF119	36.32	VOF175	46.78	VOF231	57.24
VOF008	15.58	VOF064	26.04	VOF120	36.51	VOF176	46.97	VOF232	57.43
VOF009	15.77	VOF065	26.23	VOF121	36.69	VOF177	47.15	VOF233	57.61
VOF010	15.96	VOF066	26.42	VOF122	36.88	VOF178	47.34	VOF234	57.80
VOF011	16.14	VOF067	26.61	VOF123	37.07	VOF179	47.53	VOF235	57.99
VOF012	16.33	VOF068	26.79	VOF124	37.25	VOF180	47.71	VOF236	58.17
VOF013	16.52	VOF069	26.98	VOF125	37.44	VOF181	47.90	VOF237	58.36
VOF014	16.70	VOF070	27.17	VOF126	37.63	VOF182	48.09	VOF238	58.55
VOF015	16.89	VOF071	27.35	VOF127	37.81	VOF183	48.27	VOF239	58.73
VOF016	17.08	VOF072	27.54	VOF128	38.00	VOF184	48.46	VOF240	58.92
VOF017	17.27	VOF073	27.73	VOF129	38.19	VOF185	48.65	VOF241	59.11
VOF018	17.45	VOF074	27.91	VOF130	38.37	VOF186	48.83	VOF242	59.30
VOF019	17.64	VOF075	28.10	VOF131	38.56	VOF187	49.02	VOF243	59.48
VOF020	17.83	VOF076	28.29	VOF132	38.75	VOF188	49.21	VOF244	59.67
VOF021	18.01	VOF077	28.47	VOF133	38.93	VOF189	49.39	VOF245	59.86
VOF022	18.20	VOF078	28.66	VOF134	39.12	VOF190	49.58	VOF246	60.04
VOF023	18.39	VOF079	28.85	VOF135	39.31	VOF191	49.77	VOF247	60.23
VOF024	18.57	VOF080	29.03	VOF136	39.49	VOF192	49.96	VOF248	60.42
VOF025	18.76	VOF081	29.22	VOF137	39.68	VOF193	50.14	VOF249	60.60
VOF026	18.95	VOF082	29.41	VOF138	39.87	VOF194	50.33	VOF250	60.79
VOF027	19.13	VOF083	29.59	VOF139	40.05	VOF195	50.52	VOF251	60.98
VOF028	19.32	VOF084	29.78	VOF140	40.24	VOF196	50.70	VOF252	61.16
VOF029	19.51	VOF085	29.97	VOF141	40.43	VOF197	50.89	VOF253	61.35
VOF030	19.69	VOF086	30.15	VOF142	40.62	VOF198	51.08	VOF254	61.54
VOF031	19.88	VOF087	30.34	VOF143	40.80	VOF199	51.26	VOF255	61.72
VOF032	20.07	VOF088	30.53	VOF144	40.99	VOF200	51.45		
VOF033	20.25	VOF089	30.71	VOF145	41.18	VOF201	51.64		
VOF034	20.44	VOF090	30.90	VOF146	41.36	VOF202	51.82		
VOF035	20.63	VOF091	31.09	VOF147	41.55	VOF203	52.01		
VOF036	20.81	VOF092	31.28	VOF148	41.74	VOF204	52.20		
VOF037	21.00	VOF093	31.46	VOF149	41.92	VOF205	52.38		
VOF038	21.19	VOF094	31.65	VOF150	42.11	VOF206	52.57		
VOF039	21.37	VOF095	31.84	VOF151	42.30	VOF207	52.76		
VOF040	21.56	VOF096	32.02	VOF152	42.48	VOF208	52.94		
VOF041	21.75	VOF097	32.21	VOF153	42.67	VOF209	53.13		
VOF042	21.94	VOF098	32.40	VOF154	42.86	VOF210	53.32		
VOF043	22.12	VOF099	32.58	VOF155	43.04	VOF211	53.50		
VOF044	22.31	VOF100	32.77	VOF156	43.23	VOF212	53.69		
VOF045	22.50	VOF101	32.96	VOF157	43.42	VOF213	53.88		
VOF046	22.68	VOF102	33.14	VOF158	43.60	VOF214	54.06		
VOF047	22.87	VOF103	33.33	VOF159	43.79	VOF215	54.25		
VOF048	23.06	VOF104	33.52	VOF160	43.98	VOF216	54.44		
VOF049	23.24	VOF105	33.70	VOF161	44.16	VOF217	54.63		
VOF050	23.43	VOF106	33.89	VOF162	44.35	VOF218	54.81		
VOF051	23.62	VOF107	34.08	VOF163	44.54	VOF219	55.00		
VOF052	23.80	VOF108	34.26	VOF164	44.72	VOF220	55.19		
VOF053	23.99	VOF109	34.45	VOF165	44.91	VOF221	55.37		
VOF054	24.18	VOF110	34.64	VOF166	45.10	VOF222	55.56		
VOF055	24.36	VOF111	34.82	VOF167	45.29	VOF223	55.75		

■ Conversion charts for electronic VRs: Conversion chart for the Vyprst (1/2)

Conversion chart for the Vyprst (Commands vs. Voltage values for the 50-inch and 43-inch models)

Command	Voltage [V]		Command	Voltage [V]		Command	Voltage [V]	
	50-inch Model	43-inch Model		50-inch Model	43-inch Model		50-inch Model	43-inch Model
VRP000	246.3	236.3	VRP056	270.6	260.6	VRP112	294.9	284.9
VRP001	246.7	236.7	VRP057	271.0	261.0	VRP113	295.4	285.4
VRP002	247.1	237.1	VRP058	271.5	261.5	VRP114	295.8	285.8
VRP003	247.6	237.6	VRP059	271.9	261.9	VRP115	296.2	286.2
VRP004	248.0	238.0	VRP060	272.3	262.3	VRP116	296.7	286.7
VRP005	248.4	238.4	VRP061	272.8	262.8	VRP117	297.1	287.1
VRP006	248.9	238.9	VRP062	273.2	263.2	VRP118	297.5	287.5
VRP007	249.3	239.3	VRP063	273.6	263.6	VRP119	298.0	288.0
VRP008	249.7	239.7	VRP064	274.1	264.1	VRP120	298.4	288.4
VRP009	250.2	240.2	VRP065	274.5	264.5	VRP121	298.8	288.8
VRP010	250.6	240.6	VRP066	274.9	264.9	VRP122	299.3	289.3
VRP011	251.0	241.0	VRP067	275.4	265.4	VRP123	299.7	289.7
VRP012	251.5	241.5	VRP068	275.8	265.8	VRP124	300.1	290.1
VRP013	251.9	241.9	VRP069	276.2	266.2	VRP125	300.6	290.6
VRP014	252.4	242.4	VRP070	276.7	266.7	VRP126	301.0	291.0
VRP015	252.8	242.8	VRP071	277.1	267.1	VRP127	301.4	291.4
VRP016	253.2	243.2	VRP072	277.5	267.5	VRP128	301.9	291.9
VRP017	253.7	243.7	VRP073	278.0	268.0	VRP129	302.3	292.3
VRP018	254.1	244.1	VRP074	278.4	268.4	VRP130	302.7	292.7
VRP019	254.5	244.5	VRP075	278.9	268.9	VRP131	303.2	293.2
VRP020	255.0	245.0	VRP076	279.3	269.3	VRP132	303.6	293.6
VRP021	255.4	245.4	VRP077	279.7	269.7	VRP133	304.0	294.0
VRP022	255.8	245.8	VRP078	280.2	270.2	VRP134	304.5	294.5
VRP023	256.3	246.3	VRP079	280.6	270.6	VRP135	304.9	294.9
VRP024	256.7	246.7	VRP080	281.0	271.0	VRP136	305.3	295.3
VRP025	257.1	247.1	VRP081	281.5	271.5	VRP137	305.8	295.8
VRP026	257.6	247.6	VRP082	281.9	271.9	VRP138	306.2	296.2
VRP027	258.0	248.0	VRP083	282.3	272.3	VRP139	306.7	296.7
VRP028	258.4	248.4	VRP084	282.8	272.8	VRP140	307.1	297.1
VRP029	258.9	248.9	VRP085	283.2	273.2	VRP141	307.5	297.5
VRP030	259.3	249.3	VRP086	283.6	273.6	VRP142	308.0	298.0
VRP031	259.7	249.7	VRP087	284.1	274.1	VRP143	308.4	298.4
VRP032	260.2	250.2	VRP088	284.5	274.5	VRP144	308.8	298.8
VRP033	260.6	250.6	VRP089	284.9	274.9	VRP145	309.3	299.3
VRP034	261.0	251.0	VRP090	285.4	275.4	VRP146	309.7	299.7
VRP035	261.5	251.5	VRP091	285.8	275.8	VRP147	310.1	300.1
VRP036	261.9	251.9	VRP092	286.2	276.2	VRP148	310.6	300.6
VRP037	262.3	252.3	VRP093	286.7	276.7	VRP149	311.0	301.0
VRP038	262.8	252.8	VRP094	287.1	277.1	VRP150	311.4	301.4
VRP039	263.2	253.2	VRP095	287.5	277.5	VRP151	311.9	301.9
VRP040	263.6	253.6	VRP096	288.0	278.0	VRP152	312.3	302.3
VRP041	264.1	254.1	VRP097	288.4	278.4	VRP153	312.7	302.7
VRP042	264.5	254.5	VRP098	288.8	278.8	VRP154	313.2	303.2
VRP043	264.9	254.9	VRP099	289.3	279.3	VRP155	313.6	303.6
VRP044	265.4	255.4	VRP100	289.7	279.7	VRP156	314.0	304.0
VRP045	265.8	255.8	VRP101	290.1	280.1	VRP157	314.5	304.5
VRP046	266.3	256.3	VRP102	290.6	280.6	VRP158	314.9	304.9
VRP047	266.7	256.7	VRP103	291.0	281.0	VRP159	315.3	305.3
VRP048	267.1	257.1	VRP104	291.4	281.4	VRP160	315.8	305.8
VRP049	267.6	257.6	VRP105	291.9	281.9	VRP161	316.2	306.2
VRP050	268.0	258.0	VRP106	292.3	282.3	VRP162	316.6	306.6
VRP051	268.4	258.4	VRP107	292.8	282.8	VRP163	317.1	307.1
VRP052	268.9	258.9	VRP108	293.2	283.2	VRP164	317.5	307.5
VRP053	269.3	259.3	VRP109	293.6	283.6	VRP165	317.9	307.9
VRP054	269.7	259.7	VRP110	294.1	284.1	VRP166	318.4	308.4
VRP055	270.2	260.2	VRP111	294.5	284.5	VRP167	318.8	308.8

■ Conversion charts for electronic VRs: Conversion chart for the Vyprst (2/2)

Conversion chart for the Vyprst (Commands vs. Voltage values for the 50-inch and 43-inch models)

Command	Voltage [V]		Command	Voltage [V]	
	50-inch Model	43-inch Model		50-inch Model	43-inch Model
VRP168	319.2	309.2	VRP224	343.6	333.6
VRP169	319.7	309.7	VRP225	344.0	334.0
VRP170	320.1	310.1	VRP226	344.4	334.4
VRP171	320.6	310.6	VRP227	344.9	334.9
VRP172	321.0	311.0	VRP228	345.3	335.3
VRP173	321.4	311.4	VRP229	345.7	335.7
VRP174	321.9	311.9	VRP230	346.2	336.2
VRP175	322.3	312.3	VRP231	346.6	336.6
VRP176	322.7	312.7	VRP232	347.1	337.1
VRP177	323.2	313.2	VRP233	347.5	337.5
VRP178	323.6	313.6	VRP234	347.9	337.9
VRP179	324.0	314.0	VRP235	348.4	338.4
VRP180	324.5	314.5	VRP236	348.8	338.8
VRP181	324.9	314.9	VRP237	349.2	339.2
VRP182	325.3	315.3	VRP238	349.7	339.7
VRP183	325.8	315.8	VRP239	350.1	340.1
VRP184	326.2	316.2	VRP240	350.5	340.5
VRP185	326.6	316.6	VRP241	351.0	341.0
VRP186	327.1	317.1	VRP242	351.4	341.4
VRP187	327.5	317.5	VRP243	351.8	341.8
VRP188	327.9	317.9	VRP244	352.3	342.3
VRP189	328.4	318.4	VRP245	352.7	342.7
VRP190	328.8	318.8	VRP246	353.1	343.1
VRP191	329.2	319.2	VRP247	353.6	343.6
VRP192	329.7	319.7	VRP248	354.0	344.0
VRP193	330.1	320.1	VRP249	354.4	344.4
VRP194	330.5	320.5	VRP250	354.9	344.9
VRP195	331.0	321.0	VRP251	355.3	345.3
VRP196	331.4	321.4	VRP252	355.7	345.7
VRP197	331.8	321.8	VRP253	356.2	346.2
VRP198	332.3	322.3	VRP254	356.6	346.6
VRP199	332.7	322.7	VRP255	357.0	347.0
VRP200	333.2	323.2			
VRP201	333.6	323.6			
VRP202	334.0	324.0			
VRP203	334.5	324.5			
VRP204	334.9	324.9			
VRP205	335.3	325.3			
VRP206	335.8	325.8			
VRP207	336.2	326.2			
VRP208	336.6	326.6			
VRP209	337.1	327.1			
VRP210	337.5	327.5			
VRP211	337.9	327.9			
VRP212	338.4	328.4			
VRP213	338.8	328.8			
VRP214	339.2	329.2			
VRP215	339.7	329.7			
VRP216	340.1	330.1			
VRP217	340.5	330.5			
VRP218	341.0	331.0			
VRP219	341.4	331.4			
VRP220	341.8	331.8			
VRP221	342.3	332.3			
VRP222	342.7	332.7			
VRP223	343.1	333.1			

7. GENERAL INFORMATION
7.1 DIAGNOSIS
7.1.1 PCB LOCATION

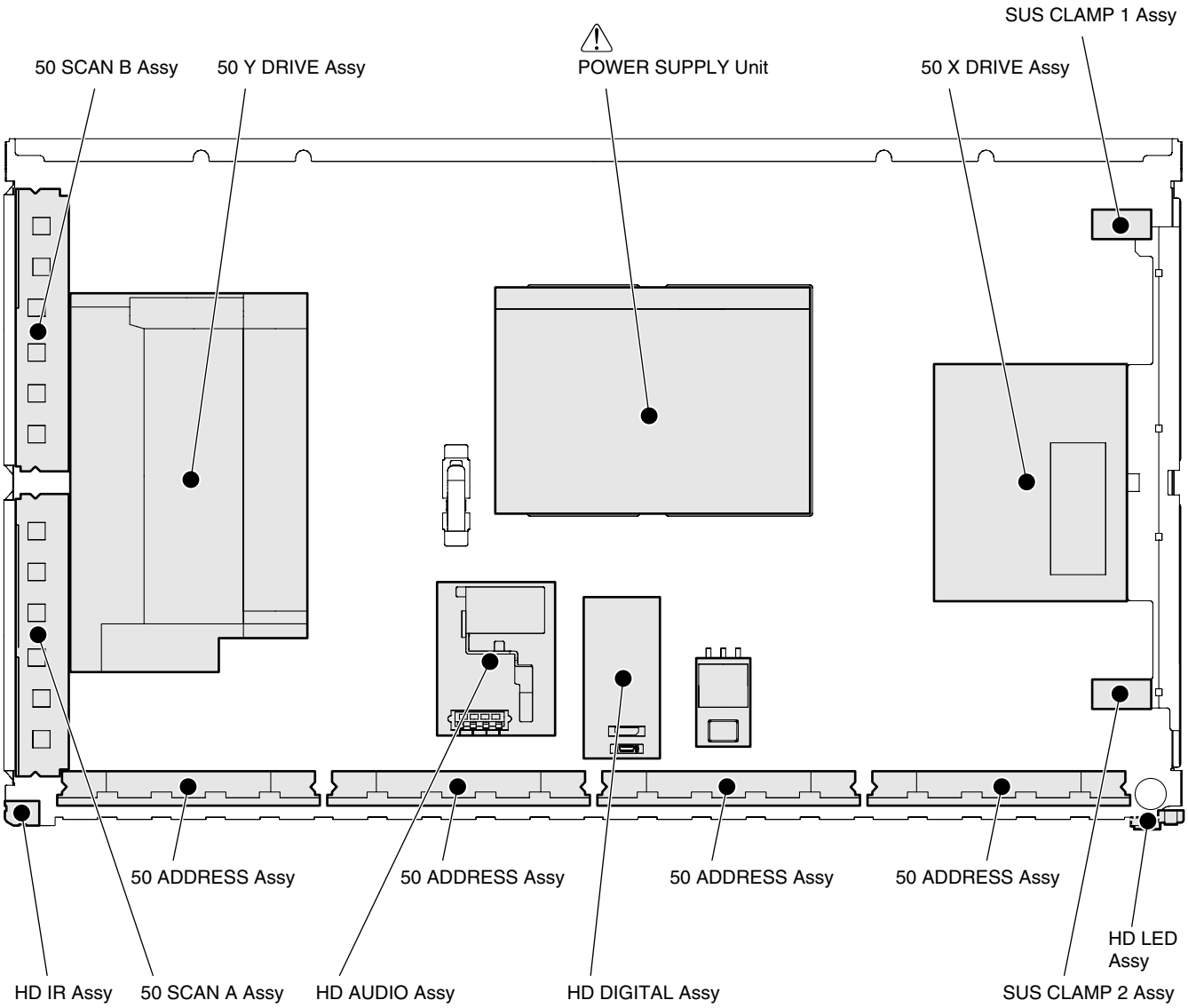

7.1.2 DIAGNOSIS OF SHUTDOWN/POWER-DOWN INDICATED BY LEDS

• Operation statuses indicated by LEDs

Status	LED Pattern			
Standby	1	Lit in Red	Blue Red	
Power ON	2	Lit in Blue	Blue Red	
AC Power OFF of one side	3	Red flashes (1000ms)	Blue Red	1000ms
System cable disconnection	4	Red and blue flash (1000ms)	Blue Red	1000ms 1000ms
Power-down	5	Red flashes (500+2500ms)	Blue Red	Once Twice n times 2.5s Once 500ms
Shutdown	6	Blue flashes (500+2500ms)	Blue Red	500ms Once Twice n times 2.5s Once
No backup copy	7	Lit in Red and blue flashes (200ms)	Blue Red	200ms

: Lit in Red LED
: Lit in Blue LED

• PD (power-down) count

1	Not used
2	POWER SUPPLY Unit
3	SCAN Assy
4	5V power supply for SCAN
5	Y-DRIVE (Not used)
6	DCDC for Y drive
7	Y-SUS
8	ADDRESS Assy
9	X-DRIVE
10	DCDC for X drive
11	X-SUS
12	Not used
13	Sequence drive stop
14	Not used
15	UNKNOWN

Note:
- When a shutdown occurs, a warning will be issued by the Media Receiver and displayed, then the power will be shut off.
- When a shutdown or power-down occurs on the Panel side, the Media Receiver will enter Standby mode (the red LED will light).

• SD (shut down) count

1	SEQUENCE PROCESSOR (SQ_IC)
2	MDU-IIC
3	RST2 abnormality
4	Panel high temperature
5	Speaker short-circuit *

* When a jumper (J105) between the HD AUDIO Assy and the POWER SUPPLY Unit is disconnected, the SD LED flashes five times in this manner.

• Block diagram of the shutdown signal

Note:
The figures ① - ⑤ indicate the number of times the LED flashes when shutdown occurs in the corresponding route.

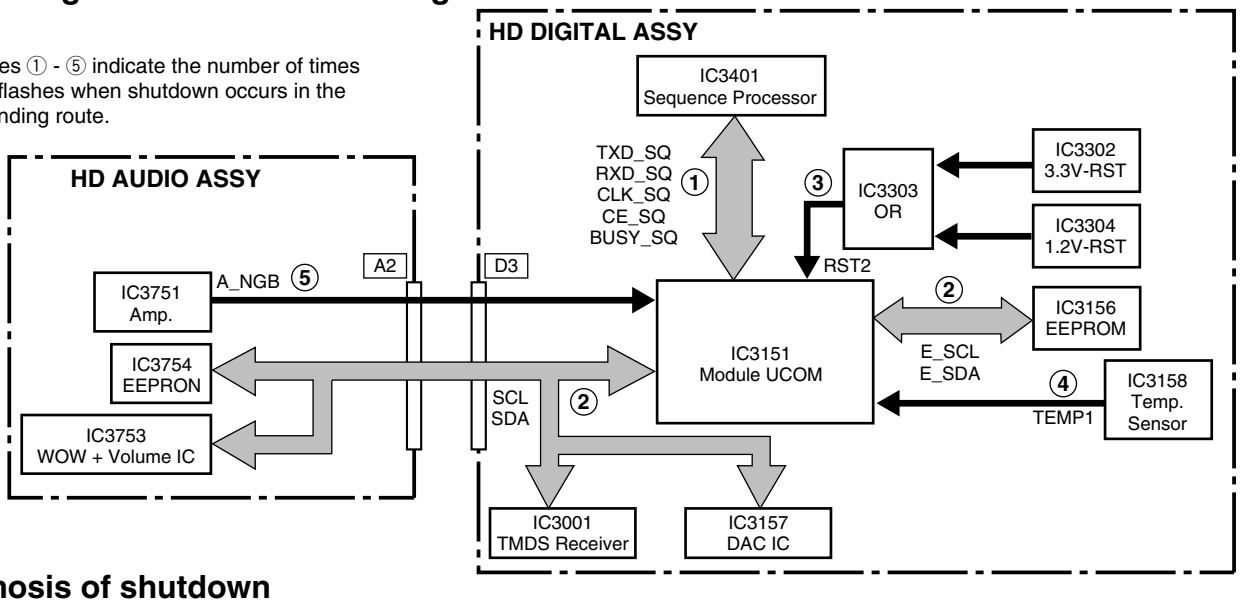

• Diagnosis of shutdown

Number of flashes	SD Circuit in Operation	Defective Assy	Reason for Shutdown	Point to be Checked	Possible Defective Part	Remarks
1 time	Communication failure of the driving processor	HD DIGITAL	Communication failure of IC3401	SQ ASIC BLOCK, PANEL FLASH BLOCK	IC3401, IC3301	
			Writing failure of IC3401			Check if version data can be read, using the "GS1" command, after the power is turned on again.
2 times	Communication failure of the IIC line (Check the SD subcategory on the Factory Menu.)	HD DIGITAL	Communication failure of the EEPROM (for retaining 4-Kbyte of data)	MODULE UCOM BLOCK	IC3156, IC3157	
				TMDS BLOCK	IC3001	
		HD AUDIO	Communication failure of the EEPROM (2-kbyte : for backup)	AUDIO AMP BLOCK	IC3754	
			Disconnection of connectors	A2 - D3		Check if the connectors are disconnected or are not connected securely.
			Defective volume IC	HD AUDIO Assy	IC3753	
3 times	Power failure of the driving processor (RST2)	HD DIGITAL	Defective DC-DC converter	DIGITAL DD CON BLOCK	U3601	Check if 3.3-V and 1.2-V power supplies are activated.
			Defective RST IC	PANEL FLASH BLOCK	IC3302 - IC3304	
			Defective IC3401	SQ ASIC BLOCK	IC3401	
		POWER SUPPLY	The 8-V power supply is not activated.			Check if the 8-V power is supplied at Pin 1 of the D11 connector.
4 times	Abnormally high temperature of the panel		Abnormally high temperature of the panel	Ambient temperature		The Panel will be shut down if the sensor detects temperature of 75°C or higher (for the PDP-436P/-506P).
5 times	Audio failure		Speakers' grounding fault	Speaker terminals		Check if the speaker cables are in contact with the chassis, etc.
		HD AUDIO	Defective AMP IC	HD AUDIO Assy	IC3751	
		HD AUDIO	Disconnection of connectors	A1 - P5		Check if the connectors are disconnected or are not connected securely.

• Power-down diagnosis (defective points)

Number of Blinks	PD Circuit in Operation	Defective PCB Assy	Reason for PD (Power-down)	Point to be Checked	Possible Defective Part	Remarks
2	POWER	POWER SUPPLY				
3	SCAN	50 (43) SCAN A, B	VH UVP	SCAN IC	SCAN IC	VH-GNDH short-circuit
		50 (43) Y DRIVE		Y SUS BLOCK	IC2252, IC2253	VSUS-SUSOUT, SUSOUT-SUSGND short-circuit
				VH DC/DC	IC2502, L2501	
			Disconnection of cable detected	CN2001, CN2350		
		50 (43) X DRIVE	VH UVP	IC1202	IC1202	VSUS-SUSOUT, SUSOUT-SUSGND short-circuit
4	SCN-5V	50 (43) SCAN A, B	Disconnection of cable detected	CN2401, CN2402		
		50 (43) Y DRIVE	IC5V UVP	SCAN IC	SCAN IC	
				IC5V DC/DC	Q2605, R2647	
				Y SUS BLOCK	R2352	
6	Y-DCDC	50 (43) Y DRIVE	VOFS UVP	VOFS DC/DC	Q2606, R2619, R2620	
				Y SUS BLOCK	IC2252, IC2253, Q2280, Q2281	MSKS-SUSOUT short-circuit
			Vprst UVP	Vprst Regulator	Q2531, Q2532, IC2535	
7	Y-SUS	50 (43) Y DRIVE	Power-down caused by detection of middle-point voltage	Y RESONANCE BLOCK	IC2101	
				Y SUS BLOCK	Q2221	
8	ADRS	50 (43) ADDRESS	Address power-down	ADDRESS RESONANCE BLOCK	D1634	V+ADR-GND_ADR short-circuit
			Disconnection of cable detected	CN1501, CN3501-CN3504		
9	XDRIVE	50 (43) X DRIVE	Disconnection of cable detected	CN1001		
10	X-DCDC	50 (43) X DRIVE	Disconnection of cable detected	CN1201		
			VRN UVP	VRN DC/DC	Q1323, R1332, R1333	
				X SUS BLOCK	R1204, Q1272	
11	X-SUS	50 (43) X DRIVE	Power-down caused by detection of middle-point voltage	X RESONANCE BLOCK	IC1101	

OVP : **O**VER **V**OLTAGE **P**ROTECT
UVP : **U**NDER **V**OLTAGE **P**ROTECT

7.1.3 OVERVIEW OF PANEL FACTORY MODE

■ Top screen of the Factory Menu for the main unit

MR INFORMATION

< MUTE > key

FUNC. CHECK

< MUTE > key

COMMON ADJ.

< MUTE > key

PANEL FACTORY

< SET > key

Top screen of the Panel Factory

If a Panel of Generation 6 is connected, "6" is indicated here.

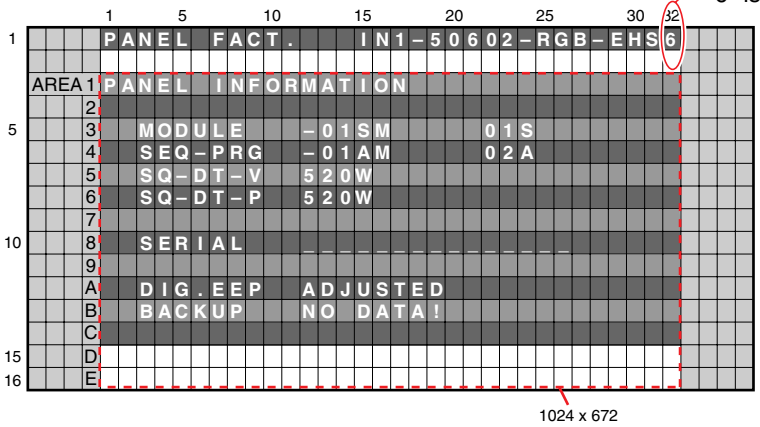

Note: With this model, the structure of Factory mode has been changed, and all items related to the Panel are gathered into PANEL FACTORY mode.

Note: On-screen displays in Factory mode are indicated in white characters on a green background for the PDP-506HD/436HD and subsequent models.

■ Configuration of Panel Factory mode

No.	Submode Name / Submode Items	Adjustable Range	Remarks
1	PANEL INFORMATION		
2	PANEL WORKS		
3	POWER DOWN		
4	SHUT DOWN		
5	PANEL-1 ADJ (+)		
5-1	X-SUS B <=>	120 to 136	Equivalent to XSB
5-2	Y-SUS B <=>	120 to 136	Equivalent to YSB
5-3	Y-SUSTAIL T <=>	120 to 136	Equivalent to YTG
5-4	Y-SUSTAIL W <=>	120 to 136	Equivalent to YTW
5-5	XY-RST W <=>	120 to 136	Equivalent to RSW
5-6	VOL SUS <=>	000 to 255	Equivalent to VSU
5-7	VOL OFFSET <=>	000 to 255	Equivalent to VOF
5-8	VOL RST P <=>	000 to 255	Equivalent to VRP
5-9	SUS FREQ. <=>	MODE1 to MODE8	Equivalent to SFR
6	PANEL-2 ADJ (+)		
6-1	R-HIGH <=>	000 to 511	Equivalent to PRH
6-2	G-HIGH <=>	000 to 511	Equivalent to PGH
6-3	B-HIGH <=>	000 to 511	Equivalent to PBH
6-4	R-LOW <=>	000 to 999	Equivalent to PRL
6-5	G-LOW <=>	000 to 999	Equivalent to PGL
6-6	B-LOW <=>	000 to 999	Equivalent to PBL
6-7	ABL <=>	000 to 255	Equivalent to ABL
7	PANEL REVISE		
7-1	R-LEVEL <=>	LV-0 to LV-7	Equivalent to RRL
7-2	G-LEVEL <=>	LV-0 to LV-7	Equivalent to RGL
7-3	B-LEVEL <=>	LV-0 to LV-7	Equivalent to RBL
8	ETC (+)		
8-1	BACKUP DATA <=>	NO OPRT<=>TRANSFER or ERR	Equivalent to BCP
8-2	DIGITAL EEPROM <=>	NO OPRT<=>DELETE/REPAIR	Equivalent to FAJ/UAJ
8-3	PD INFO. <=>	NO OPRT <=>CLEAR	Equivalent to CPD
8-4	SD INFO. <=>	NO OPRT <=>CLEAR	Equivalent to CSD
8-5	HR-MTR INFO. <=>	NO OPRT <=>CLEAR	Equivalent to CHM
8-6	PM/B1-B5 <=>	NO OPRT <=>CLEAR	Equivalent to CPM
8-7	P-COUNT INFO. <=>	NO OPRT <=>CLEAR	Equivalent to CPC
9	MASK SETUP (+)		
9-1	MASK OFF		Equivalent to MKS+S00
9-2	SGL MASK 01 <=>	<=>V48<=>V50<=>V60<=>P60<=>P70<=>V72<=>V75<=> (Select each sequence.)	Equivalent to MKS+S01
9-3	SGL MASK 02 <=>		Equivalent to MKS+S02
	• • •		• • •
9-62	CMB MASK 08 <=>		Equivalent to MKC+S08
9-63	CMB MASK 09 <=>		Equivalent to MKC+S09

■ Details on submodes related to the panel

The GUI display examples here are those displayed when the main unit is used with the 50-inch model.

1. PANEL INFORMATION

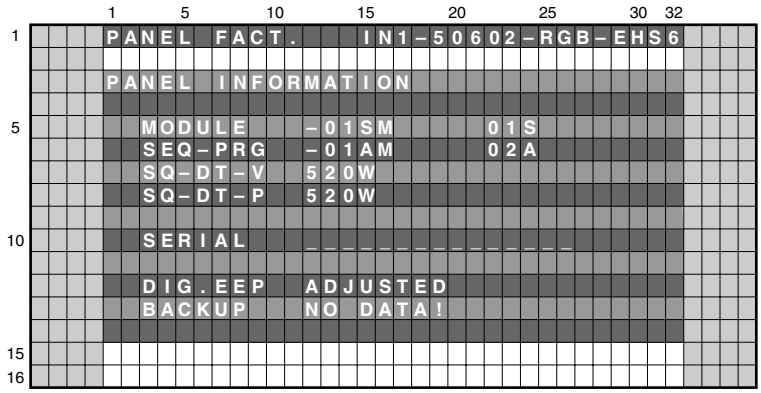

■ Key operation

<DOWN> : Shifting to PANEL WORKS
<UP> : Shifting to MASK SETUP (+)
<SEL> : MASK ON/OFF
<L/R> : Updating displayed information

The version of the microcomputer of the panel, serial number of the main unit, adjustment values of the main unit, and backup status are displayed.

2. PANEL WORKS

Note:
Screen display " PANEL_FACT.___IN1-50602-RGB-EHS6".
Refer to service manual of Media Receiver.

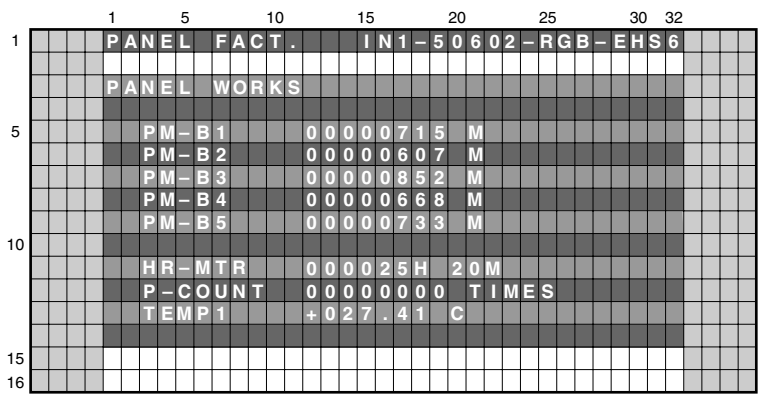

■ Key operation

<DOWN> : Shifting to POWER DOWN
<UP> : Shifting to PANEL INFORMATION
<SEL> : MASK ON/OFF
<L/R> : Updating displayed information

- The data from the pulse meter for each block from PM-B1 to PM-B5 are indicated. The values stored in the EEPROM (3 bytes each) are each converted into a decimal number, and the higher-order 8 digits are displayed (that means that the lowest-order digit represents millions).
- TEMP1: Indicates the temperature of the panel. By your pressing the L or R key, the temperature value can be updated.

3. POWER DOWN

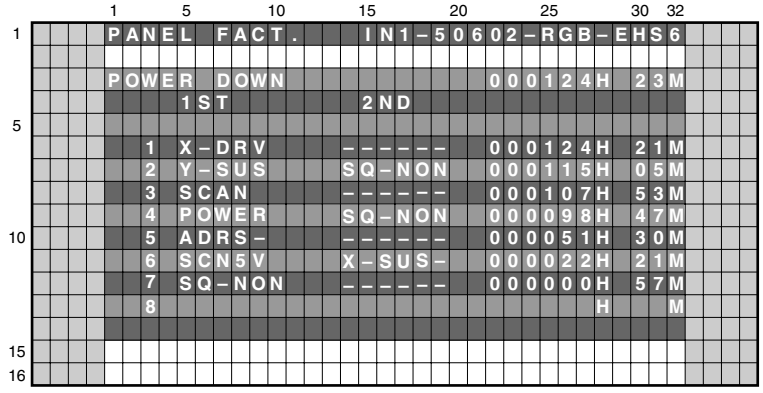

■ Key operation

<DOWN> : Shifting to SHUTDOWN
<UP> : Shifting to PANEL WORKS
<SEL> : MASK ON/OFF
<L/R> : Updating displayed information

• Basically, data acquired with the command QPD are displayed in the columns "1ST" and "2ND, with the values from the hour meter when the power-down occurred.

<Causes of power-down and corresponding OSD indications>

Cause of power-down	OSD Indication	Cause of power-down	OSD Indication
POWER SUPPLY Unit	P-PWR	ADDRESS Assy	ADRS
SCAN Assy	SCAN	X-DRIVE Assy	X-DRV
5V power for SCAN	SCN5V	DCDC for X drive	X-DCDC
Not used		X-SUS	X-SUS
DCDC for Y drive	Y-DCDC	Sequence drive stopped	SQ-NON
Y-SUS	Y-SUS	Specification inability	UNKNOW

4. SHUT DOWN

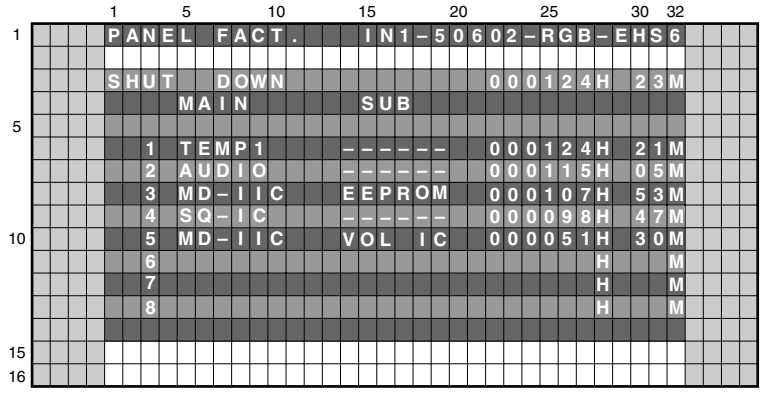

■ Key operation

<DOWN> : Shifting to PANEL-2ADJ (+)
<UP> : Shifting to POWER DOWN
<SEL> : MASK ON/OFF
<L/R> : Updating displayed information

• Basically, data acquired with the command QSD (for MDU-IIC, subcategory data are also displayed) are displayed with the values from the hour meter when the shutdown occurred.

<Causes of shutdown and corresponding OSD indications>

Cause of shutdown (main)	OSD Indication
SEQUENCE PROCESSOR	SQ-IC
MDU-IIC	MDU-IIC (with subcategory)
Abnormality in RST2	RST2
Panel having high temperature	TEMP1
Short-circuited speaker	AUDIO

Cause of shutdown (sub)	OSD Indication
EEPROM	EEPROM (IC3156)
BACKUP	BACKUP (IC3754)
DAC	DAC (IC3302 to IC3304)
Audio IC	VOL-IC (IC3158)
DVI	DVI

5. PANEL-1 ADJ

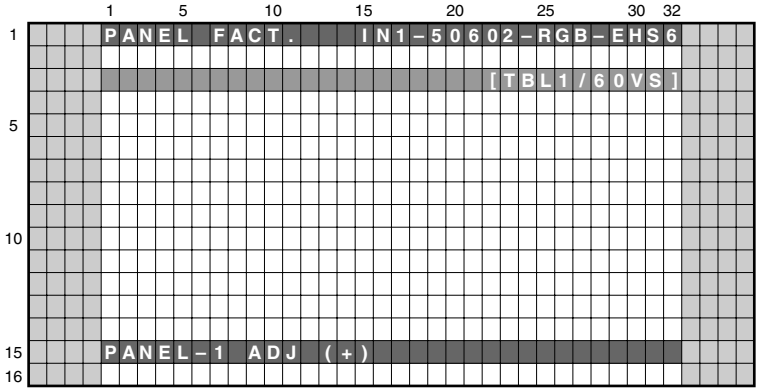

■ Key operation

<DOWN> : Shifting to PANEL-2 ADJ (+)
<UP> : Shifting to POWER DOWN
<SET> : Shifting to the next nested layer
<SEL> : MASK ON/OFF

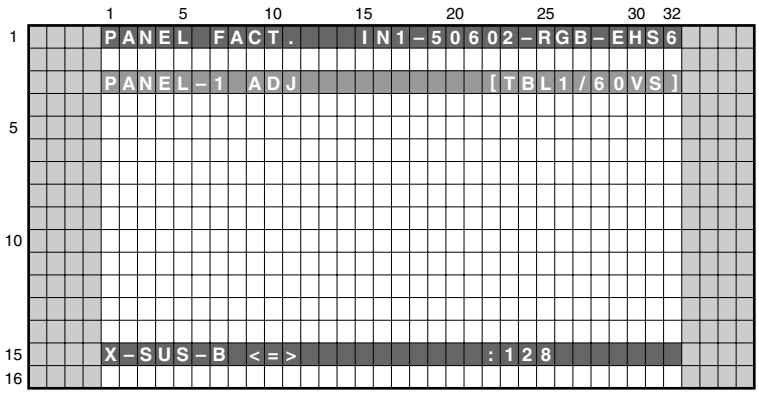

■ Key operation

<DOWN> : Shifting to the next item
<UP> : Shifting to the previous item
<RIGHT> : Adding by one to the adjustment value
<LEFT> : Subtracting by one from the adjustment value
<VOL+> : Adding by 10 to the adjustment value
<VOL-> : Subtracting by 10 from the adjustment value
<SET> : Determining the adjustment value and shifting to the upper layer
<SEL> : MASK ON/OFF

<Drive-sequence indications and indications for the ABL/WB tables>
(The OSD indications are displayed at the right part of the third line for submode PANEL-1 ADJ and subsequent submodes.)

Type of WB/ABL Tables		Type of Drive Sequences					
		Standard Video/MASK ON		Nonstandard Video		PC	
TBL1		48VS		---		60PS	Not used for consumer products
TBL2		50VS		50VN		70PS	
TBL3		60VS		60VN			
TBL4		72VS	Only Mask indication	---			
		75VS		75VN			

<Lower-layer items of PANEL-1 ADJ>

No.	Items	Adjustment/Setting Value	Remarks
1	X-SUS B <=>	120 to 136	Equivalent to XSB
2	Y-SUS B <=>	120 to 136	Equivalent to YSB
3	Y-SUSTAIL T <=>	120 to 136	Equivalent to YTG
4	Y-SUSTAIL W <=>	120 to 136	Equivalent to YTW
5	XY-RST W <=>	120 to 136	Equivalent to RSW
6	VOL SUS <=>	000 to 255	Equivalent to VSU
7	VOL OFFSET <=>	000 to 255	Equivalent to VOF
8	VOL RST P <=>	000 to 255	Equivalent to VRP
9	SUS FREQ. <=>	<=>MODE1 to MODE8<=>	Equivalent to SFR

6. PANEL-2 ADJ

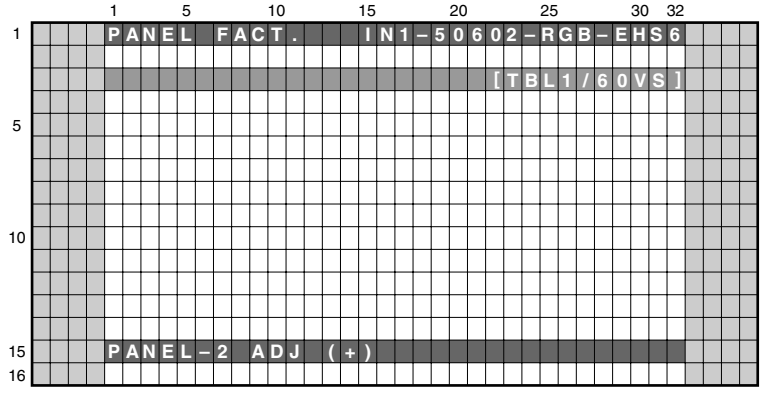

■ Key operation

<DOWN> : Shifting to PANEL REVISE
<UP> : Shifting to PANEL-1 ADJ (+)
<SEL> : MASK ON/OFF
<SET> : Shifting to the next nested layer

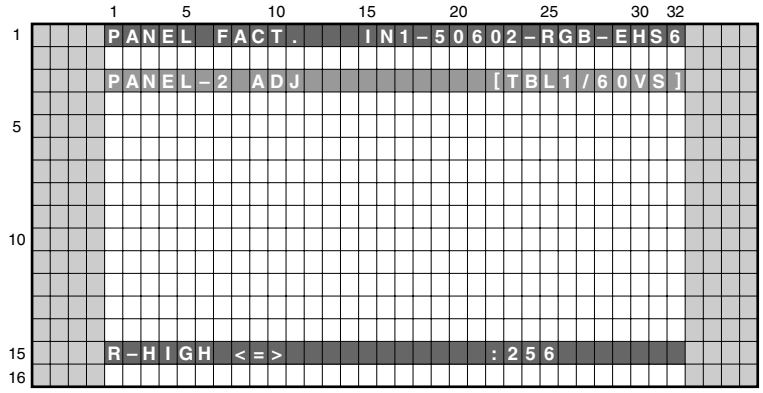

■ Key operation

<DOWN> : Shifting to the next item
<UP> : Shifting to the previous item
<RIGHT> : Adding by one to the adjustment value
<LEFT> : Subtracting by one from the adjustment value
<VOL+> : Adding by 10 to the adjustment value
<VOL-> : Subtracting by 10 from the adjustment value
<SET> : Determining the adjustment value and shifting to the upper layer
<SEL> : MASK ON/OFF

<Lower-layer items of PANEL-2 ADJ>

No.	Items	Adjustment/Setting Value	Remarks
1	R-HIGH <=>	000 to 511	Equivalent to PRH
2	G-HIGH <=>	000 to 511	Equivalent to PGH
3	B-HIGH <=>	000 to 511	Equivalent to PBH
4	R-LOW <=>	000 to 999	Equivalent to PRL
5	G-LOW <=>	000 to 999	Equivalent to PGL
6	B-LOW <=>	000 to 999	Equivalent to PBL
7	ABL <=>	000 to 255	Equivalent to ABL

7. PANEL REVISE

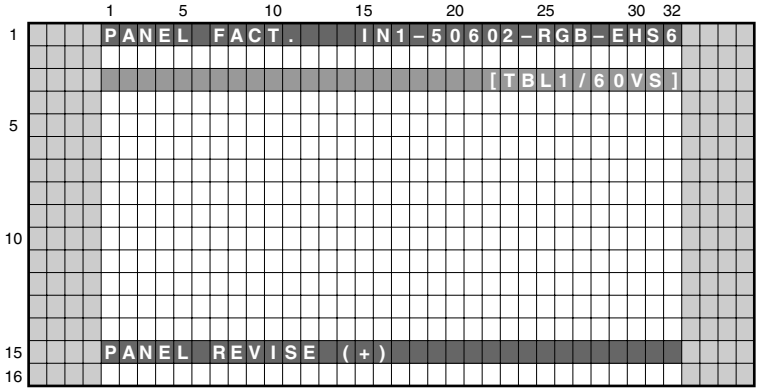

■ Key operation

<DOWN> : Shifting to ETC.(+)
<UP> : Shifting to PANEL-2 ADJ (+)
<SEL> : MASK ON/OFF
<SET> : Shifting to the next nested layer

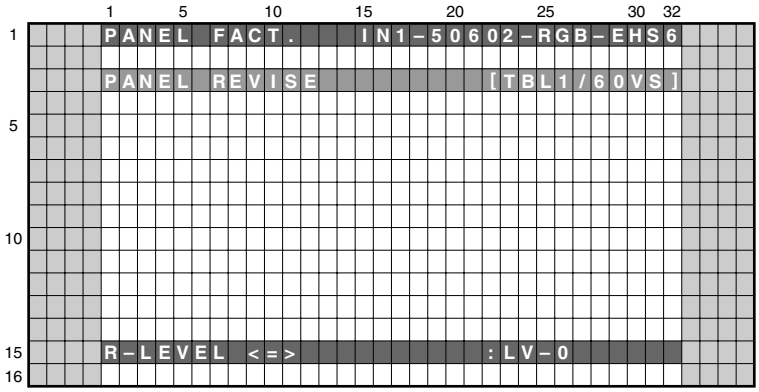

■ Key operation

<DOWN> : Shifting to the next item
<UP> : Shifting to the previous item
<RIGHT> : Adding by one to the adjustment value
<LEFT> : Subtracting by one from the adjustment value
<VOL+> : Adding by 10 to the adjustment value
<VOL-> : Subtracting by 10 from the adjustment value
<SET> : Determining the setting value and shifting to the upper layer
<SEL> : MASK ON/OFF

<Lower-layer items of PANEL REVISE>

No.	Items	Adjustment/Setting Value	Remarks
1	R-LEVEL <=>	<=>LV-0 to LV-7<=>	Equivalent to RRL
2	G-LEVEL <=>	<=>LV-0 to LV-7<=>	Equivalent to RGL
3	B-LEVEL <=>	<=>LV-0 to LV-7<=>	Equivalent to RBL

8. ETC.

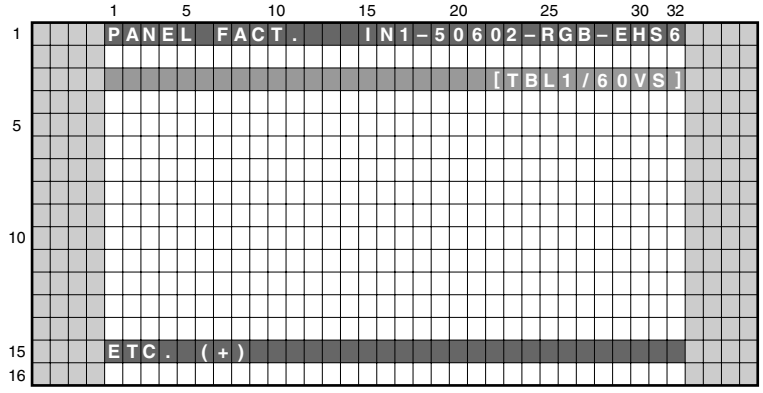

■ Key operation

<DOWN> : Shifting to MASK SETUP (+)
<UP> : Shifting to PANEL REVISE (+)
<SEL> : MASK ON/OFF
<SET> : Shifting to the next nested layer

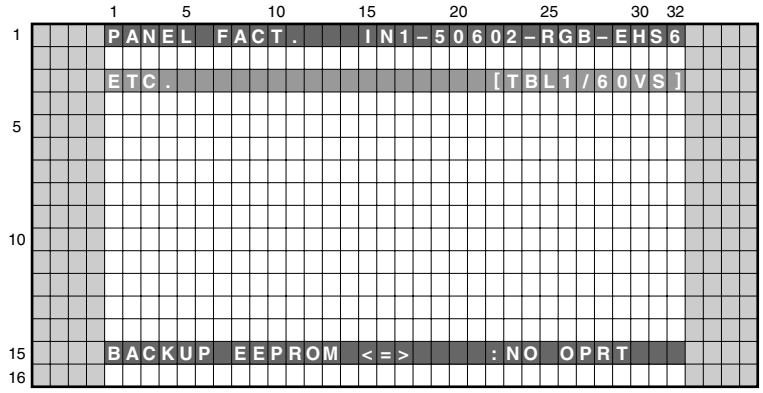

■ Key operation

<DOWN> : Shifting to the next item
<UP> : Shifting to the previous item
<RIGHT> : Adding by one to the adjustment value
<LEFT> : Subtracting by one from the adjustment value
<SET> : Determining the setting value and shifting to the upper layer
<SEL> : MASK ON/OFF

<Lower-layer items of ETC.>

No.	Items	Adjustment/Setting Value	Remarks
1	BACKUP DATA <=>	<=>NO OPRT<=>TRANSFER<=>	"ERR" is indicated when no data are in the backup EEPROM. To activate the option to select TRANSFER, press the SET key about 5 seconds. (There is a situation resting more than 5 seconds.)
2	DIGITAL EEPROM <=>	<=>NO OPRT<=>REPAIR/DELETE<=>	"DELETE" is indicated when the main unit has been already adjusted. To activate the option to select REPAIR/DELETE, press the SET key about 5 seconds. (There is a situation resting more than 5 seconds.)
3	PD INFO. <=>	<=>NO OPRT<=>CLEAR<=>	To activate the option to select CLEAR, repeatedly press the SET key about 5 seconds. (There is a situation resting more than 5 seconds.)
4	SD INFO. <=>	<=>NO OPRT<=>CLEAR<=>	
5	HR-MTR INFO. <=>	<=>NO OPRT<=>CLEAR<=>	
6	PM/B1-B5 <=>	<=>NO OPRT<=>CLEAR<=>	
7	P-COUNT INFO. <=>	<=>NO OPRT<=>CLEAR<=>	

- "NO OPRT" is selected when this submode is entered (to avoid accidental misoperation).
- When each item is set, the process starts then the unit shifts to the upper layer. (When NO OPRT is determined, the unit will shift to the upper layer without doing anything.)
- When data are set to be backed up, if the digital EEPROM has not been adjusted, do the operation of LED pattern No. 7.

9. MASK SETUP

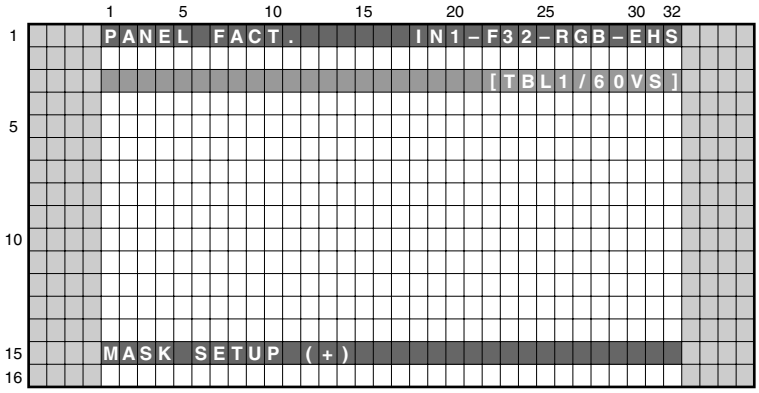

■ Key operation

<DOWN> : Shifting to PANEL INFORMATION
<UP> : Shifting to ETC. (+)
<SEL> : MASK ON/OFF
<SET> : Shifting to the next nested layer

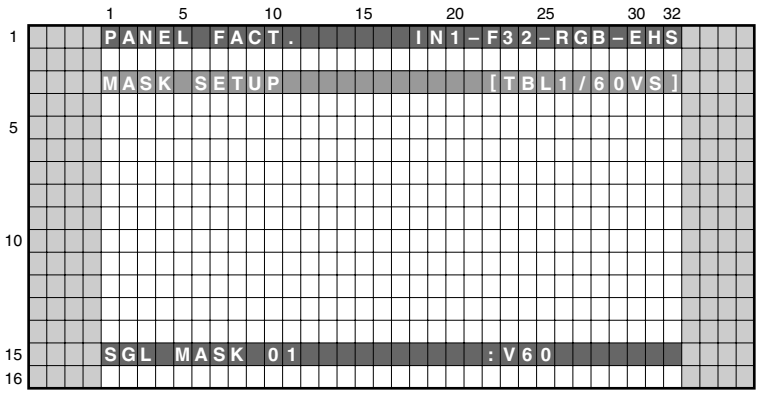

■ Key operation

<DOWN> : Shifting to the next MASK
<UP> : Shifting to the previous MASK
<RIGHT> : Changing MASK sequence (+)
<LEFT> : Changing MASK sequence (-)
<SET> : Determining the setting value and shifting to the upper layer
<SEL> : MASK ON/OFF

<Lower-layer items of MASK SETUP>

No.	Items	Adjustment/Setting Value	Remarks
1	MASK OFF		Equivalent to MKS+S00
2	SGL MASK 01 <=>	<=>48V<=>50V<=>60V<=> 60P<=>70P<=>72V<=>75V<=>	Equivalent to MKS+S01
3	SGL MASK 02 <=>		Equivalent to MKS+S02
4	• • •		• • •
5	CMB MASK 09 <=>		Equivalent to MKC+S08
6	CMB MASK 10 <=>		Equivalent to MKC+S09

• With the keys <LEFT> and <RIGHT>, the Panel drive sequence in the MASK indication is changed in the following way:
<=>48V<=>50V<=>60V<=>72V<=>75V<=>60P<=>70P<=>

7.1.4 OPERATION WHEN THE MEDIA RECEIVER IS NOT CONNECTED

As the connection conditions of the system cables (MDR cable, DVI cable) are usually detected, if no connection, such as cable disconnection, is detected, a warning indication (alternate flashing of the red and blue areas) is displayed on the mask screen, and the red and green LEDs flash alternately. Then after about 30 seconds, the power is automatically turned off.

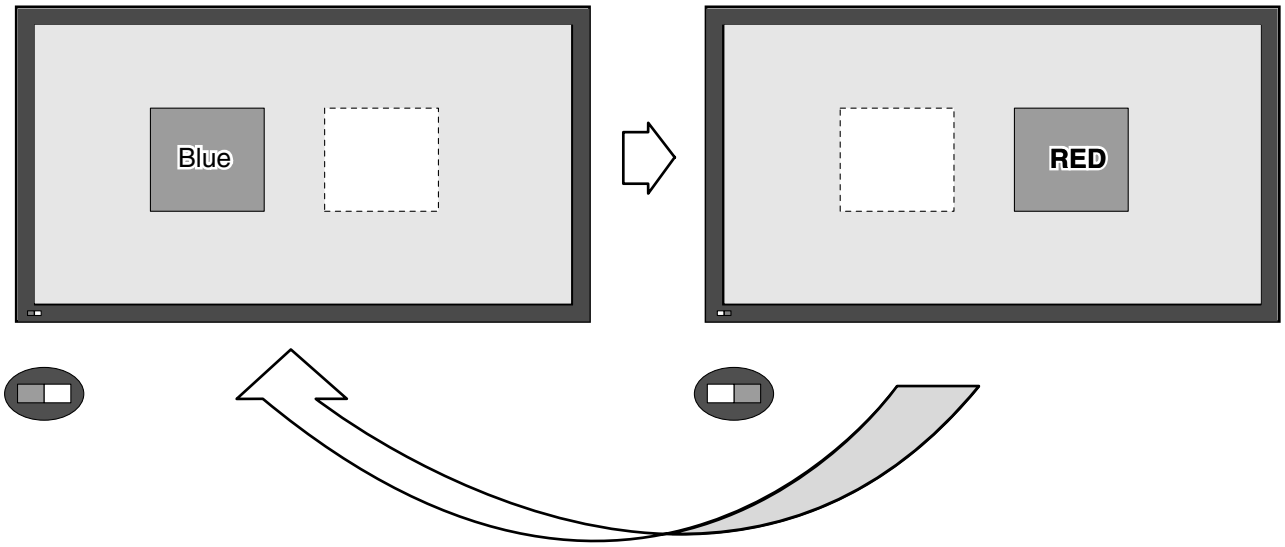

Alternate flashing at intervals of about 1 second

To operate the panel without the Media Receiver, there are the following two ways:

1. Operation-without-the-Media-Receiver mode

Input the "SYS S00" RS232C command. The status of the LEDs changes to that in normal operation mode.

Note: Turning the AC switch to OFF then ON also maintains this mode. However, once the unit is connected with the Media Receiver using the System cable, this mode is automatically canceled.

2. DVI mode

Turn the unit on while DVI SG signals are being input with only the DVI connecter connected. After a warning is displayed for about 5 seconds, the unit is ready to display the screen of the input signal. (Blue LED lit)

Notes: • Although the output from XGA (43 inch) and WXGA (50 inch) can be input to the unit, this is not a mode open to general users. (With some signals, errors such as power-down may occur.)

7.1.5 POWER ON/OFF FUNCTION FOR THE LARGE-SIGNAL SYSTEM

Function: To prevent a power-down from being generated, operation of only the digital-signal processing and audio circuits are enabled, and power is not supplied to the panel driving system (large-signal system).

Usages: 1. In a case where a check is required of signals' being correctly output to the driving systems during a repair, etc.
2. In a case where diagnosis is required for judging whether the power to the large-signal system or small-signal system has been down when a power-down occurred

Methods: 1. Short-circuit the points (see Fig. 4 below) on the face and on the reverse side of the HD DIGITAL Assy.
2. Issue the "DRV S00" RS-232C command. (Command for turning the function off: DRV S01)

Notes:
- When the power to the large-signal system is off, as the PD signal is muted, power-downs other than PS_PD are not activated.
- As soon as the clips are removed while the power to the large-signal system is off, a power-down will occur. Be sure to turn the power off before removing the clips.
- While this function is activated with RS-232C commands, it is possible to issue "DRV S01" (for turning the function off) while the power is on. However, as it may damage the unit, turn the power off before issuing the "DRV S01" command.
- Although the "DRV S00/S01" RS-232C commands are valid during Standby mode, once the main power is turned off, the unit will return to "DRV S01."

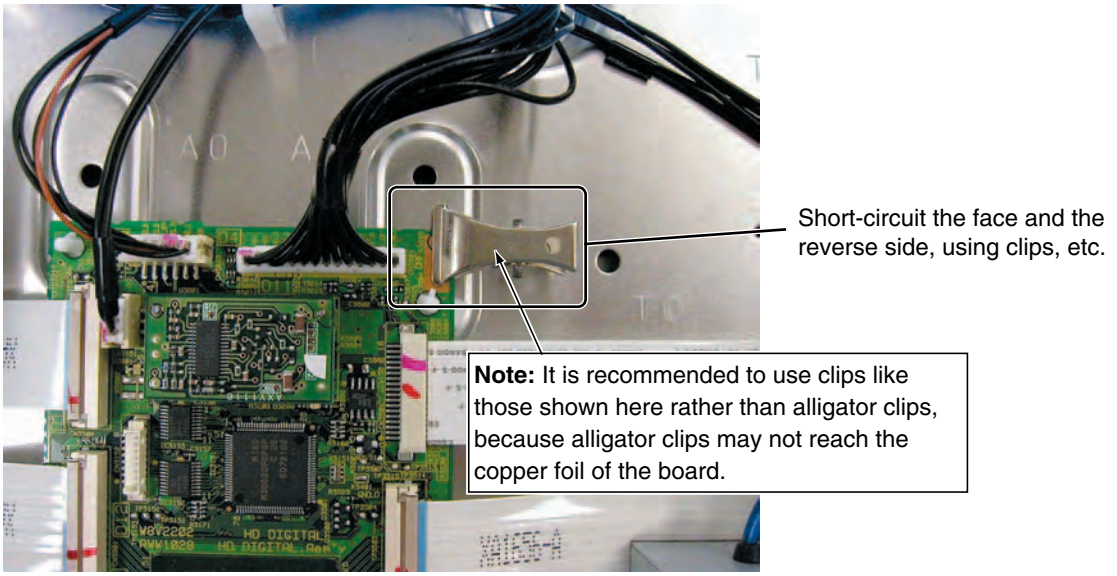

Fig. 4 Position of DRIVE OFF

7.1.6 BACKUP WHEN THE MAIN UNIT IS ADJUSTED

■ Outline

Adjustment data set at the factory are stored in the EEPROM (IC****/4K) on the HD DIGITAL Assy. Those adjustment data are automatically backed up in the EEPROM (backup EEPROM: IC****) on the HD AUDIO Assy. Therefore, even if the HD DIGITAL Assy is replaced, the adjustment data can be restored by copying the backup data, which enables you to omit newly performing adjustments on the main unit.

■ Data to be backed up

- Voltage margin adjustment values
- Data on the hour meter
- Upper limit of power-adjustment value
- Data on the pulse meter
- Panel WB adjustment values
- Serial number
- Drive waveform adjustment values
- Data of the P-ON counter
- PD/SD histories

■ How to copy the backup data

1. When the HD DIGITAL Assy is replaced with that for service (normal servicing)
   (In a case where no data are on the DIG. EEP, and backup data have been adjusted)

   Command: "BCP" (Effective during FAY)
   Factory Menu

   PANEL INFORMATION
   ▼ (down)
   • • •
   ▼ (down)
   ETC. (+)
   [set]
   BACKUP DATA: NO OPRT
   >> (right)
   BACKUP DATA: TRANSFER
   [set] (Press and hold for 5 seconds.)

   - After the HD DIGITAL Assy is replaced with that for service, check that “DIG. EEP: NO DATA!” is displayed on the Panel Information screen of the Factory Menu.
   - If this command is not executed, the red LED lights, and the blue LED flashes, to warn you that copying of the backup adjustment data for the main unit failed.
   - If both the HD DIGITAL Assy and HD AUDIO Assy are to be replaced, first replace the HD AUDIO Assy and set the unit to Standby mode. Then replace the HD DIGITAL Assy.

2. In a case where a HD DIGITAL Assy that was mounted on another unit is to be reused as a service part.

   Command: "FAJ" (Effective during FAY)
   Factory Menu: PANEL FACT => ETC => DIGITAL EEPROM: DELETE

   PANEL INFORMATION
   ▼ (down)
   • • •
   ▼ (down)
   ETC. (+)
   [set]
   BACKUP DATA: NO OPRT
   ▼ (down)
   DIGITAL EEPROM: NO OPRT
   >> (right)
   DIGITAL EEPROM: REPAIR
   [set] (Press and hold for 5 seconds.)

   - If the HD DIGITAL Assy of Unit 1 is mounted to be reused in Unit 2 to be repaired, and Unit 2 enters Standby mode, the adjustment data and histories stored in Unit 1 are erased, and those of Unit 2 are copied. Once overwritten, the original data will not be restored. After the Assy is replaced, be sure to enter Factory mode, using the remote control unit for servicing, and perform the procedures described herein. Or, before mounting an Assy to be reused as a service Assy, perform these procedures then mount it on the product to be repaired.

3. In a case where the HD DIGITAL Assy is replaced with one for servicing because of a defective EEPROM on the original Assy and manual adjustments are to be performed
(In a case where no data are stored in the HD DIGITAL Assy or as backup, and the values that have been manually adjusted on Service Menu are to be applied as adjustment data for the main unit)

Command: "UAJ" (Effective during FAY)
Factory Menu

PANEL INFORMATION
▼ (down)
• • •
▼ (down)
ETC. (+)
[set]
BACKUP DATA: NO OPRT
▼ (down)
DIGITAL EEPROM: NO OPRT
>> (right)
DIGITAL EEPROM: REPAIR
[set] (Press and hold for 5 seconds.)

- If the HD DIGITAL Assy with which adjustment data for the main unit have been copied is mounted, the above procedures are not necessary after manual adjustment.
(The indication "DIGITAL EEPROM: REPAIR" will not be displayed.)

7.1.7 HOW TO CLEAR HISTORY DATA

■ Clearing data on various histories when the HD DIGITAL Assy is replaced

Other than adjustment data for the main unit, data to be backed up include the accumulated power-on time and a history of defective parts, which are data updated and stored in memory. Among those data, some are required to be cleared when the HD DIGITAL Assy is replaced for servicing, as shown below:

Item	Backed-up data	Type of servicing			RS-232C command
		Panel replacement	Replacement of the power-supply block	Others	
Hour meter	Accumulated display	To be cleared	Not to be cleared	Not to be cleared	CHM
SD history	Point where an SD occurred and data on the hour meter	To be cleared	Not to be cleared	Not to be cleared	CSD
PD history	Point where a PD occurred and data on the hour meter	To be cleared	Not to be cleared	Not to be cleared	CPD
Pulse meter	Accumulated number of pulses of the Panel (5 blocks)	To be cleared (essential)	Not to be cleared	Not to be cleared	CPM
Accumulated number of power-ons	Accumulated number of RELAY_ONs	Not to be cleared	To be cleared (essential)	Not to be cleared	CPC

Notes:

1: With the PDP-506P/436P and subsequent models, because various compensation functions use pulse-meter data for calculating compensation values, if related Assys are replaced, data on various histories must be cleared.

2: To clear data using RS-232C commands, after entering Factory mode (by sending FAY or PFY), issue a corresponding command. Otherwise, the command will not be executed.

How to clear the history for each item on the Factory Menu

Start point of Panel Factory

PANEL INFORMATION

▼ (down)

• • •

▼ (down)

ETC. (+)

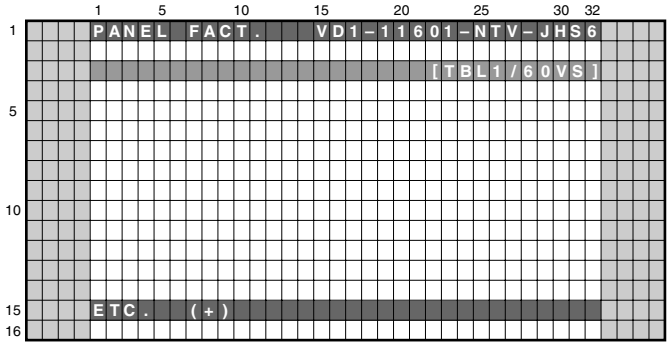

[set]

BACKUP DATA

▼ (down)

DIGITAL EEPROM

▼ (down)

Clearing the PD history

PD INFO: NO OPRT >> (right) PD INFO: CLEAR

[set] (Press and hold for 5 seconds.)

▼ (down)

Clearing the SD history

SD INFO: NO OPRT >> (right) SD INFO: CLEAR

[set] (Press and hold for 5 seconds.)

▼ (down)

Clearing the data on the hour meter

HR-MTR INFO: NO OPRT >> (right) HR-MTR INFO: CLEAR

[set] (Press and hold for 5 seconds.)

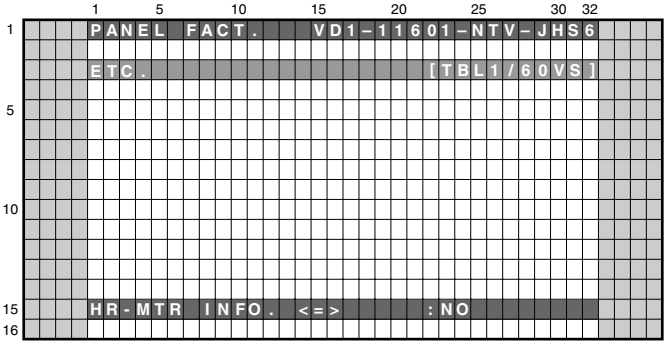

▼ (down)

Clearing the data on the pulse meter

PM/B1-BS INFO: NO OPRT >> (right) PM/B1-BS INFO: CLEAR

[set] (Press and hold for 5 seconds.)

▼ (down)

Clearing the data on the number of power-ons

P COUNT INFO: NO OPRT >> (right) P COUNT INFO: CLEAR

[set] (Press and hold for 5 seconds.)

7.1.8 DISASSEMBLY

Note : Even if the unit shown in the photos and illustrations in this manual may differ from your product, the procedures described here are common.

1 Rear Case (506)

① Remove the two screws.
② Remove the tweleve screws.
③ Remove the fourteen screws.

Note ∗1:
When reassembling, first secure the screws for these holes to position the rear case (506) correctly.
The hole of a left side, the screw tighten the hole of the right side next first.

④ Remove the rear case (506).

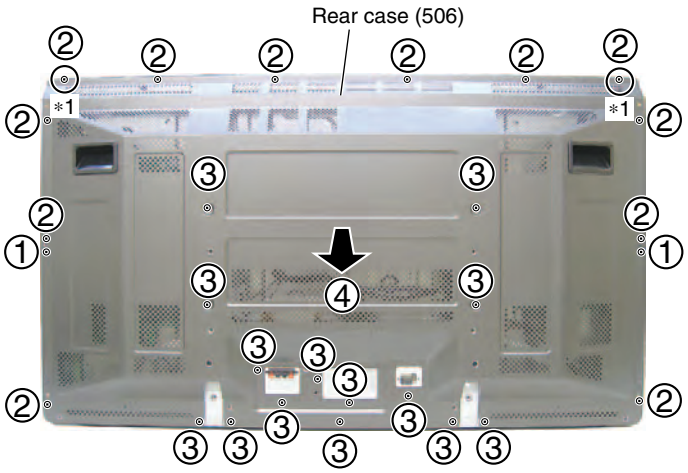

2 Control Plate Section

① Remove the two screws.
② Remove the two screws.
③ Remove the two hexagon head screws.
④ Disconnect the connector.
⑤ Remove the three screws.
⑥ Remove the control plate.

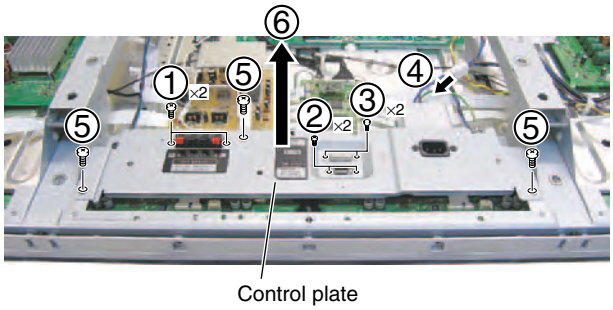

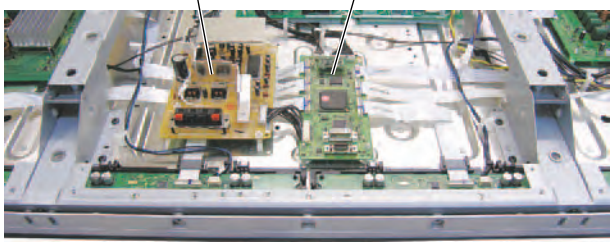

3 Front Case Assy (506PE)

① Remove the four screw rivets.

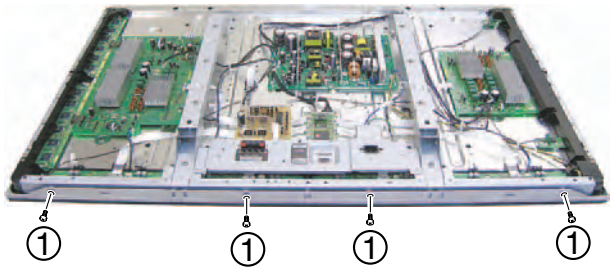

② Remove the front case Assy (506PE).

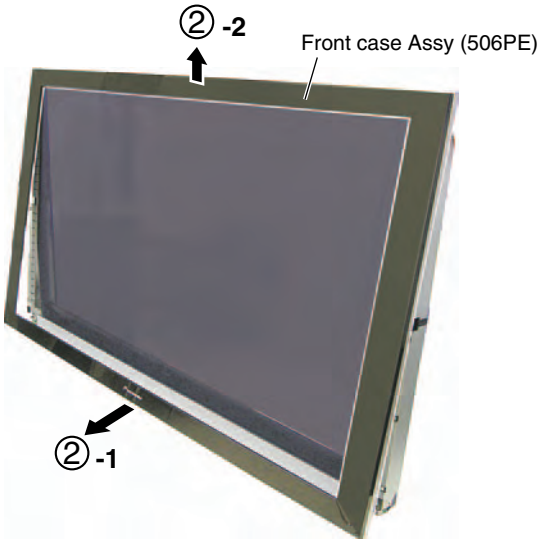

• When only the front case assy (506PE) is to be removed

The front case assy (506PE) can be removed without removing the rear case (506) beforehand.
Remove the two screws and four screw rivets shown below:

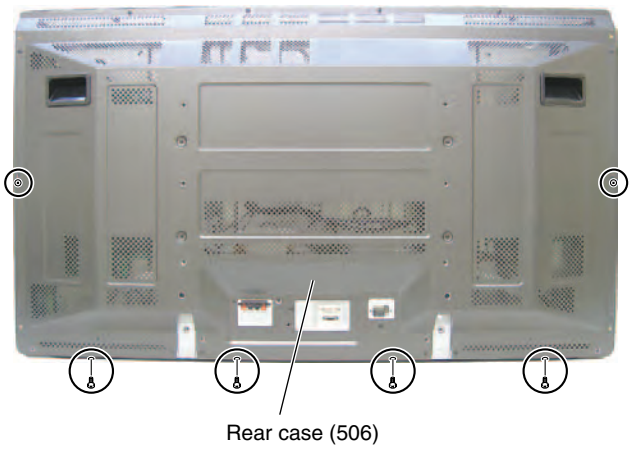

• Note when the front case assy (506PE) is to be reattached

① Hook the upper part of the Front Case Assy (506PE) on the upper part of the Front Panel, leaving a fist-sized gap between the bottom and the lower part of the Front Case Assy.
② Push the couplers of the Front Case Assy (506PE) into the rear case (506).
③ Make sure that all the couplers have been pushed into the rear case (506).

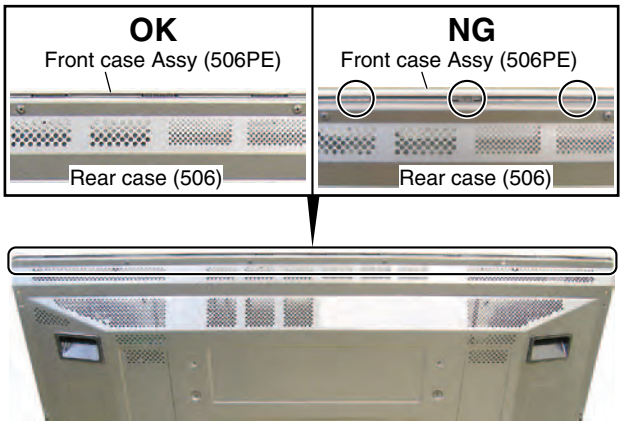

4 Front Chassis H Assy (50)

① Remove the two screws.
② Remove the two screws.
③ Remove the two screws.
④ Disconnect the connector.
⑤ Remove the front chassis H Assy (50).

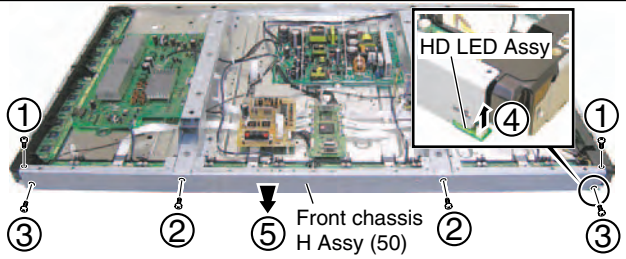

5 SUS CLAMP 1 and 2 Assys

① Remove the two screws.
② Remove the panel holder V1 (50) and V2 (50)s.
(Unhook the six hooks.)

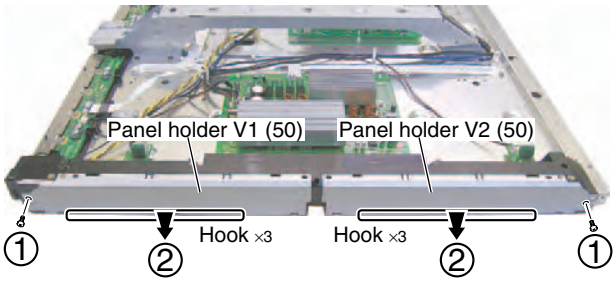

③ Release the housing wire.
④ Remove the four screws.
⑤ Remove the front chassis VR (50).

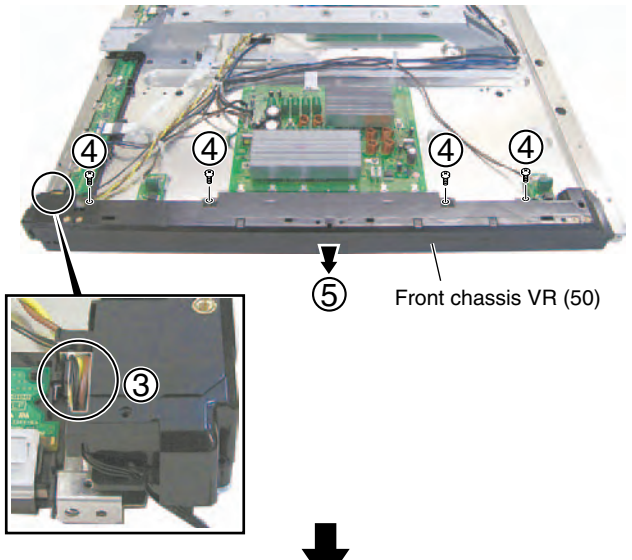

⑥ Remove the two screws.
⑦ Remove the two screws.
⑧ Unhook the two PCB spacers.
⑨ Remove the SUS CLAMP 1 and 2 Assys.

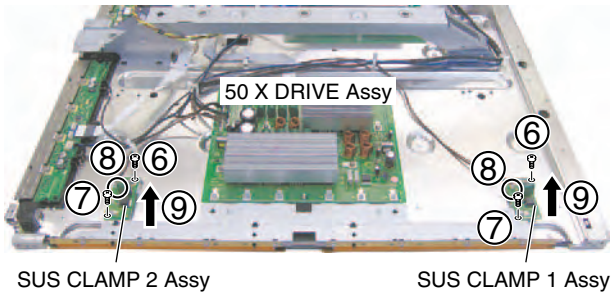

6 50 SCAN A and B Assys

① Remove the two screws.

② Remove the panel holder V1 (50) and V2 (50)s.
(Unhook the six hooks.)

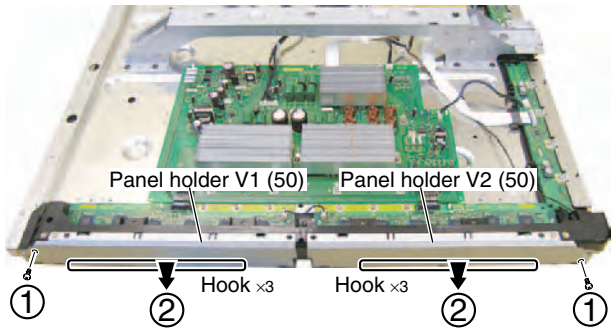

③ Release the housing wire.

④ Remove the three screws.

⑤ Remove the front chassis VL (50).

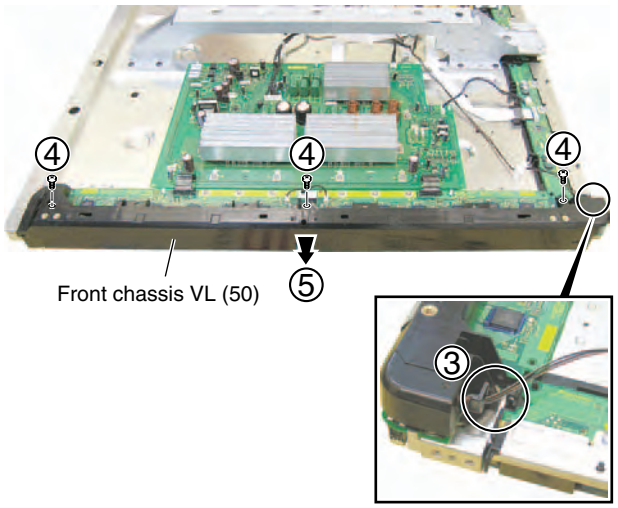

⑥ Remove the four screws.

⑦ Disconnect the two pin connectors.

⑧ Unhook the seven PCB spacers.

⑨ Remove the 50 SCAN A and B Assys.

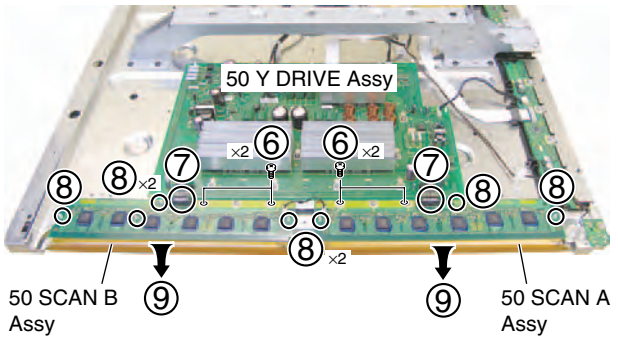

7.2 IC

• The information shown in the list is basic information and may not correspond exactly to that shown in the schematic diagrams.

● **List of IC**

AN16025A, TC7SH08FUS1, TC74VHC00FTS1, AXF1140, AXF1142, TC74VHC08FTS1, AXF1141, M62334FP, TC74VHC123AFTS1, PST3610UR, PEG122C, NJW1183L

■ AN16025A (50 SCAN A ASSY : IC2701 - IC2706) (50 SCAN B ASSY : IC2801 - IC2806)

• Plasma Display Panel IC

● **Pin Arrangement (Top view)**

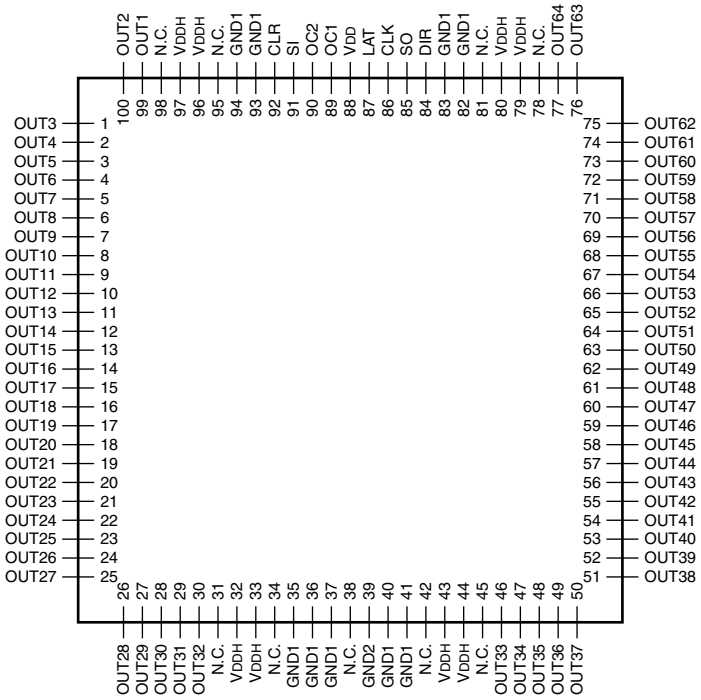

● **Block Diagram**

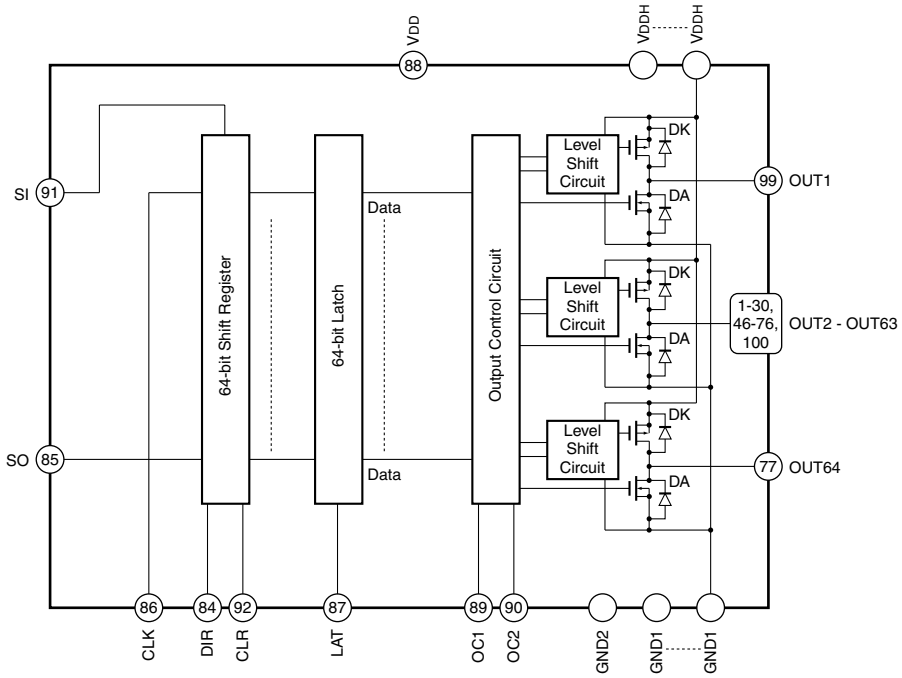

● Pin Function

No.	Pin Name	I/O	Pin Function
1 - 30	OUT3 - OUT32	O	High-voltage push-pull output
31	N.C.	–	Not connected
32 - 33	V_{DDH}	–	High-voltage circuit supply
34	N.C.	–	Not connected
35 - 37	GND1	–	Ground
38	N.C.	–	Not connected
39	GND2	–	Ground
40 - 41	GND1	–	Ground
42	N.C.	–	Not connected
43 - 44	V_{DDH}	–	High-voltage circuit supply
45	N.C.	–	Not connected
46 - 77	OUT33 - OUT64	O	High-voltage push-pull output
78	N.C.	–	Not connected
79 - 80	V_{DDH}	–	High-voltage circuit supply
81	N.C.	–	Not connected
82 - 83	GND1	–	Ground
84	DIR	I	Setup of shift register shift direction L = Shift into reverse (SO → SI) H = Shift forward (SI → SO)
85	SO	I/O	Serial data input / output
86	CLK	I	Serial clock input Fetch SI or SO data to shift register by CLK rise edge
87	LAT	I	LAT data input L = Transfer shift register data to output latch H = Hold data to output latch
88	V_{DD}	–	Logic supply
89	OC1	I	Output control Control output according to the right truth value table
90	OC2	I	
91	SI	I/O	Serial data input / output
92	CLR	I	All output reset CLR pin : L → Normal operation CLR pin : H → All output High
93 - 94	GND1	–	Ground
95	N.C.	–	Not connected
96 - 97	V_{DDH}	–	High-voltage circuit supply
98	N.C.	–	Not connected
99 - 100	OUT1 - OUT2	O	High-voltage push-pull output

OC1	OC2	OUT
L	L	ALL Hi-Z
L	H	DATA
H	L	ALL L
H	H	ALL H

■ TC7SH08FUS1 (50 SCAN B ASSY : IC2807)

• 2-input AND Gate

● Pin Arrangement (Top view) / Block Diagram

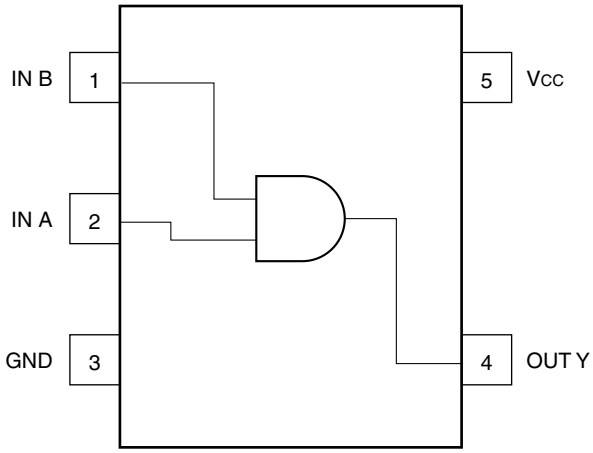

● Truth Table

A	B	Y
L	L	L
L	H	L
H	L	L
H	H	H

■ TC74VHC00FTS1 (50 X DRIVE ASSY : IC1002)

• Quad 2-Input NAND Gate

● Block Diagram

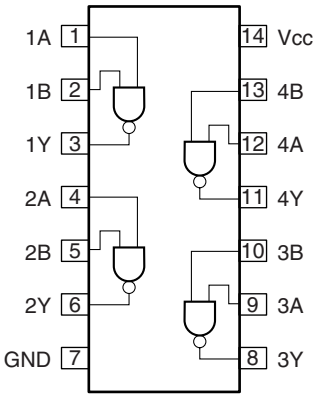

● Truth Table

A	B	Y
L	L	H
L	H	H
H	L	H
H	H	L

■ AXF1140 (50 X DRIVE ASSY : IC1202)

• X Mask Module

● **Block Diagram**

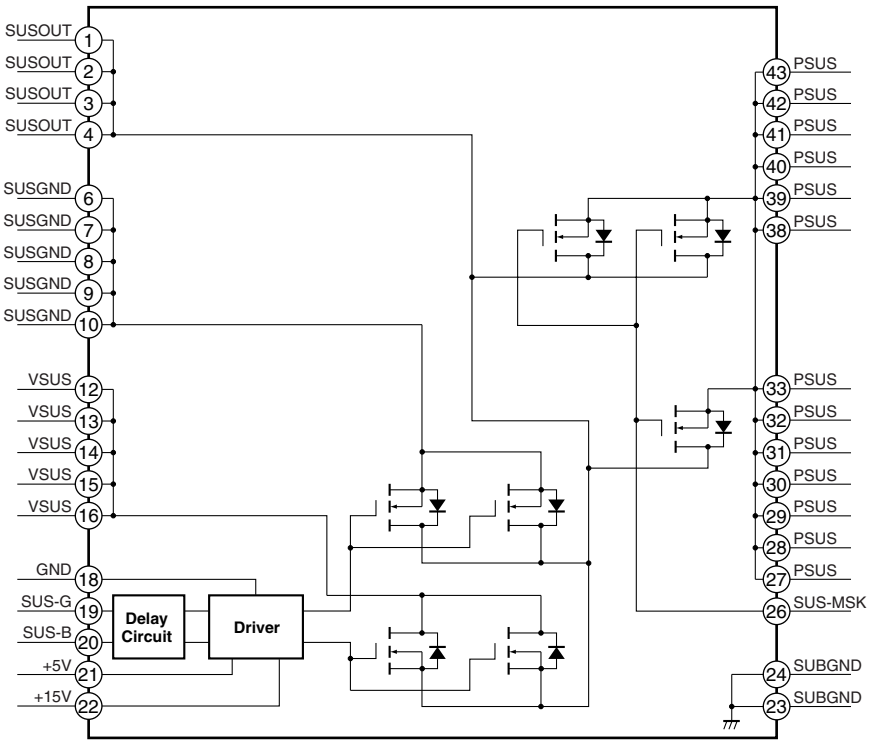

■ AXF1142 (50 X DRIVE ASSY : IC1101)
(50 Y DRIVE ASSY : IC2101)

• DK Module

● **Block Diagram**

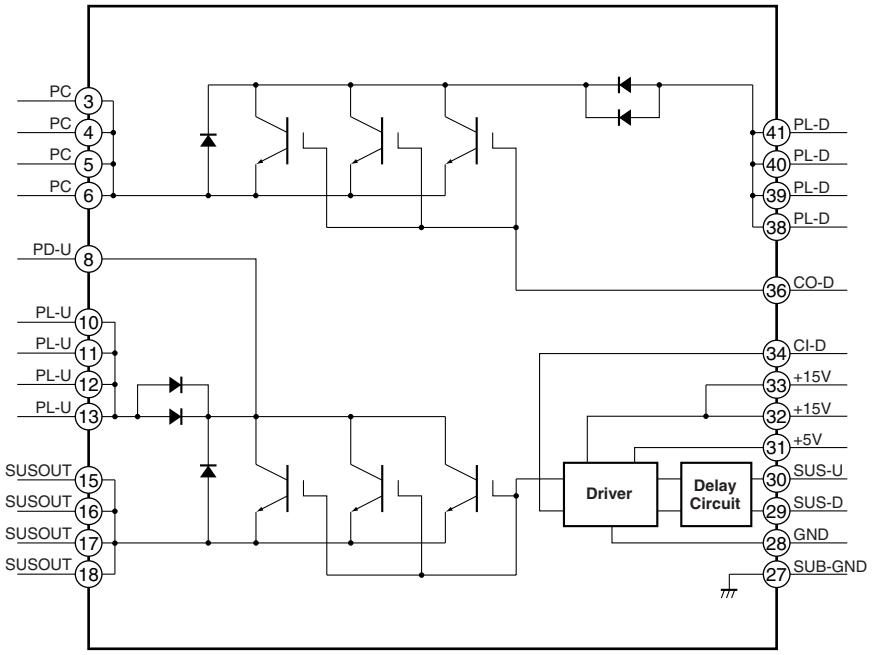

■ TC74VHC08FTS1 (50 Y DRIVE ASSY : IC2003, IC2005)

• Quad 2-input AND Gate

● Pin Arrangement (Top view) / Block Diagram

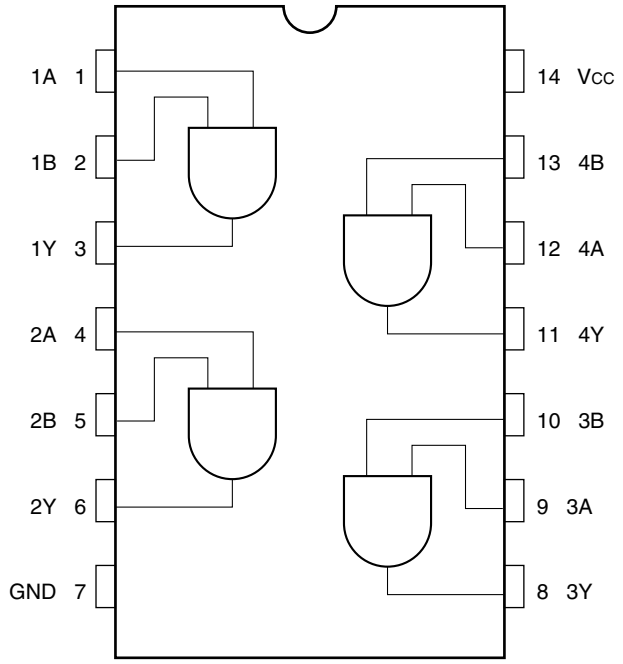

● Truth Table

A	B	Y
L	L	L
L	H	L
H	L	L
H	H	H

■ AXF1141 (50 Y DRIVE ASSY : IC2252, IC2253)

• Y Mask Module

● Block Diagram

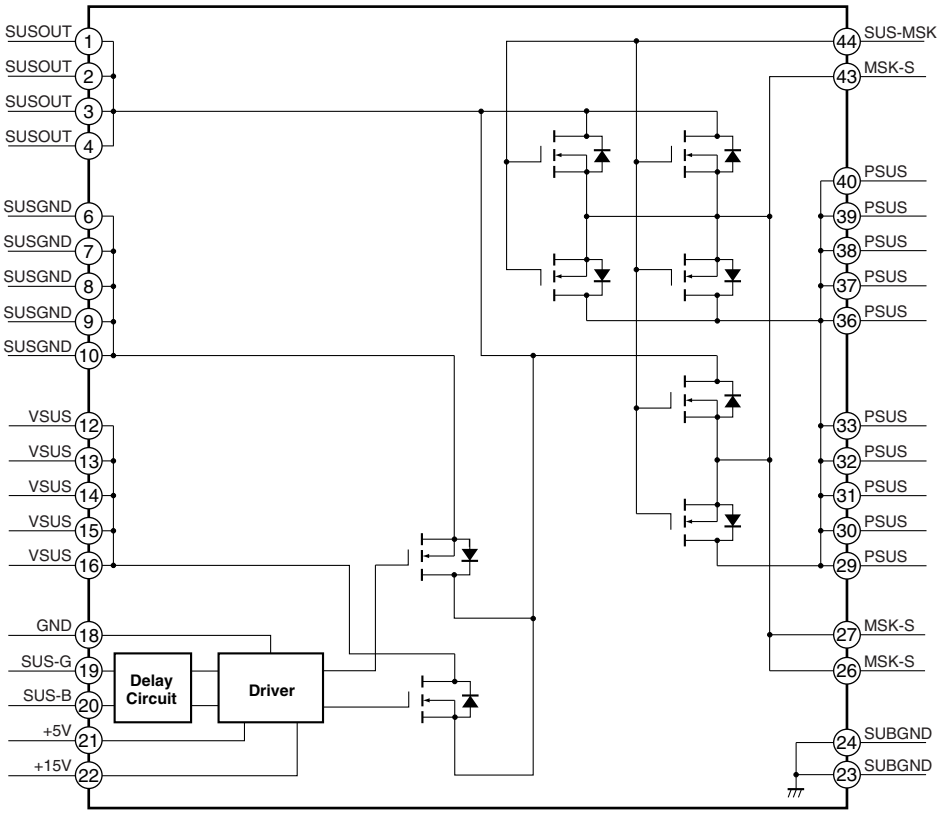

■ M62334FP (HD DIGITAL ASSY : IC3157)

• 8-bit 4ch I2C Bus D-A Converter with Buffer Amplifier

● Pin Arrangement (Top view)

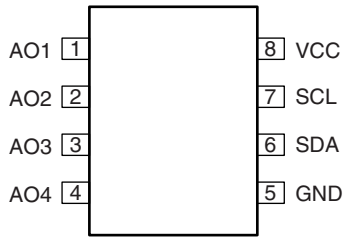

● Pin Function

No.	Pin Name	Pin Function
1	AO1	8-bit resolution D-A converter output
2	AO2	
3	AO3	
4	AO4	
5	GND	Ground
6	SDA	Serial data input
7	SCL	Serial clock input
8	VCC	Power supply

● Block Diagram

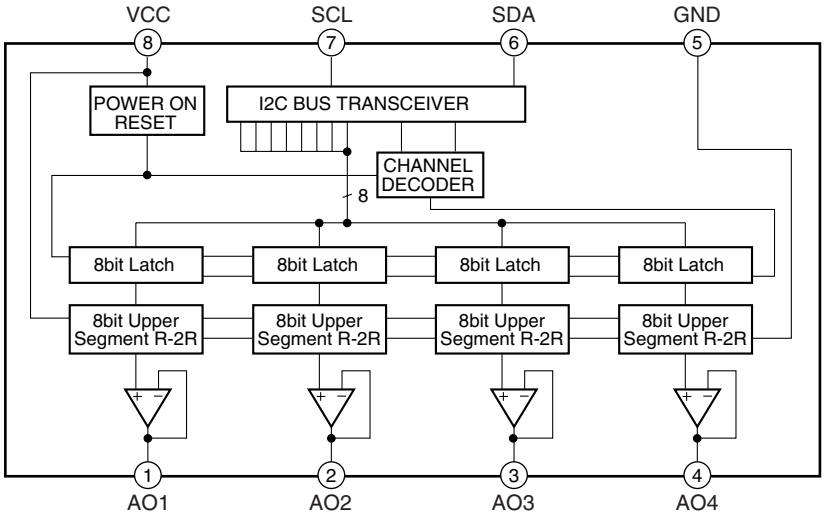

■ TC74VHC123AFTS1 (HD DIGITAL ASSY : IC3160)

• Dual Monostable Multivibrator/AFN/AFT Retriggerble

● Pin Arrangement (Top view)

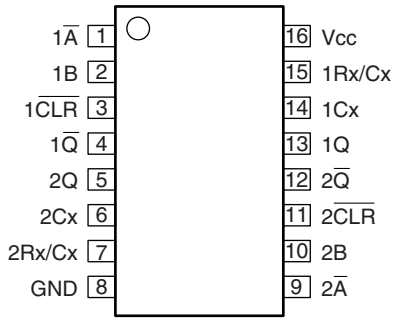

● Truth Table

Inputs			Outputs		Note
$\overline{A}$	B	$\overline{CLR}$	Q	$\overline{Q}$	
↓	H	H	⎍	⎍	Output enable
X	L	H	L	H	Inhibit
H	X	H	L	H	Inhibit
L	↑	H	⎍	⎍	Output enable
L	H	↑	⎍	⎍	Output enable
X	X	L	L	H	Reset

X: Don't care

■ PST3610UR (HD DIGITAL ASSY : IC3304)

• Reset IC

● Pin Arrangement (Top view)

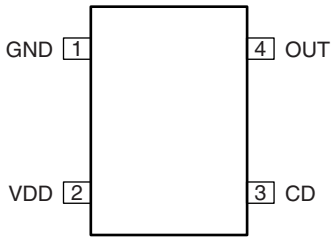

● Pin Function

No.	Pin Name	Pin Function
1	GND	Ground
2	VDD	Power supply / Voltage detection
3	CD	Capacitor connect pin for delay
4	OUT	Reset signal output

● Block Diagram

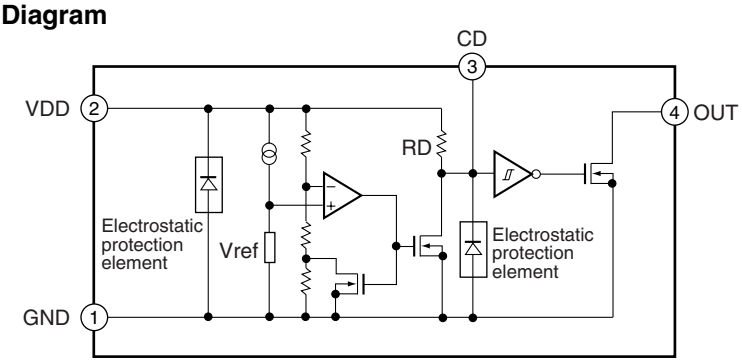

■ PEG122C (HD DIGITAL ASSY : IC3401)

• LSI for PDP video processing (SEQUENCE PROCESSOR)

● Pin Arrangement (Top view)

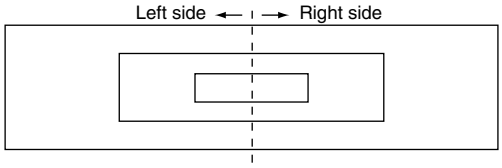

● Left side (Top view)

	1	2	3	4	5	6	7	8	9	10	11	12	13	
A	BAI5	GAI1	GAI4	GAI9	RAI4	RAI9	BBI0	BBI6	GBI1	GBI5	RBI1	RBI7	TRNSEND1	A
B	BAI4	GAI0	GND33	GAI8	RAI3	RAI8	HDI	BBI5	GBI0	GDN33	RBI0	RBI6	TRNSEND0	B
C	BAI3	BAI9	VDD33	GAI7	RAI2	RAI7	VDI	BBI4	BBI9	VDD33	GBI9	RBI5	VDD33	C
D	BAI2	BAI8	GAI3	GAI6	RAI1	RAI6	DEI	BBI3	BBI8	GBI4	GBI8	RBI4	RBI9	D
E	BAI1	BAI7	GAI2	GAI5	RAI0	RAI5	DCLKI	BBI2	BBI7	GBI3	GBI7	RBI3	RBI8	E
F	BAI0	BAI6	PEAK	APLDT	THEATER	GND12	VDD12	BBI1	VDD12	GBI2	GBI6	RBI2	VDD12	F
G	XSCAN20	XSCAN19	XSCAN18	XSCAN17	XSCAN16	VDD12								G
H	XSCAN15	XSCAN14	XSCAN13	XSCAN12	XSCAN11	VDDTC12								H
J	XSCAN10	GND33	VDD33	XSCAN9	GNDTC12	VDD12								J
K	XSCAN8	XSCAN7	XSCAN6	XSCAN5	XSCAN4	VDDTC12								K
L	XSCAN3	XSCAN2	XSCAN1	XSCAN0	GND12	VDD12					GND12	GND12	GND12	L
M	XSUS10	XSUS9	XSUS8	XSUS7	GNDTC12	VDD12					GND12	GND12	GND12	M
N	XSUS6	GND33	VDD33	XSUS5	GND12	VDD12					GND12	GND12	GND12	N
P	XSUS4	XSUS3	XSUS2	XSUS1	XSUS0	VDDTC12					GND12	GND12	GND12	P
R	ADRS0	ADRS1	ADRS2	ADRS3	GNDTC12	VDD12					GND12	GND12	GND12	R
T	TEST_I0	GND33	VDD33	TEST_I1	TEST_I2	TEST_R					GND12	GND12	GND12	T
U	TXOUTM063	TXOUTP063	GNDLA	VDDLA	GNDLA	VDDL12								U
V	TXCLKOUTM06	TXCLKOUTP06	GNDLA	VDDLA	GNDLA	VDDLA								V
W	TXOUTM062	TXOUTP062	GNDLA	VDDLA	GNDLA	VDDLA								W
Y	TXOUTM061	TXOUTP061	GNDLA	VDDLA	GNDLA	VDDL12								Y
AA	TXOUTM060	TXOUTP060	GNDLA	VDDLA	VDDLA	VDDLA	VDDLA	VDDL12	VDDLA	VDDLA	VDDL12	VDDLA	VDDLA	AA
AB	TXOUTM073	TXOUTP073	GNDLA	VDDLA	GNDLA	GNDLA	GNDLA	GNDLA	GNDLA	GNDLA	GNDLA	VDDBG	REFIN	AB
AC	TXCLKOUTM07	TXCLKOUTP07	GNDLA	VDDLA	VDDLA	VDDLA	VDDLA	VDDLA	VDDLA	VDDLA	VDDLA	VDDLA	VDDLA	AC
AD	TXOUTM072	TXOUTP072	GNDLA	GNDLA	GNDLA	GNDLA	GNDLA	GNDLA	GNDLA	GNDLA	GNDLA	GNDLA	GNDLA	AD
AE	TXOUTM071	TXOUTP071	GNDLA	TXOUTP033	TXCLKOUTP03	TXOUTP032	TXOUTP031	TXOUTP030	TXOUTP023	TXCLKOUTP02	TXOUTP022	TXOUTP021	TXOUTP020	AE
AF	TXOUTM070	TXOUTP070	GNDLA	TXOUTM033	TXCLKOUTM03	TXOUTM032	TXOUTM031	TXOUTM030	TXOUTM023	TXCLKOUTM02	TXOUTM022	TXOUTM021	TXOUTM020	AF

● Right side (Top view)

	14	15	16	17	18	19	20	21	22	23	24	25	26	
A	CLKD	VSSPA	EXDI011	EXDI09	EXA4	EXA10	EXA2	EXA16	EXA20	CSCS_N1	CSCS_N2	CSIOSCK1	CSIORXD	A
B	CSRD_N	VCCPA	EXDI04	GND33	EXA3	EXA9	EXA1	EXA15	EXA19	CSCS_N0	GND33	TCRAM_MONITOR0	TCRAM_MONITOR1	B
C	CLKS	CLK_MONI	EXDI012	VDD33	EXDI00	EXA8	CSWR_N	EXA14	EXA18	UARTRXD	VDD33	TCRAM_MONITOR2	CSIORQ	C
D	VSSPB	EXDI014	EXDI05	EXDI02	EXDI08	EXA7	EXA0	EXA13	EXA17	UARTTXD	CS10TXD	RESETX	SDIJTAG	D
E	VCCPB	EXDI07	EXDI013	EXDI010	EXDI01	EXA6	EXA11	EXA12	CSEXWAIT_N	SDITRST_N	SDITCK	SDIDBI_N	SDITMS	E
F	LPFMONI	EXDI015	EXDI06	EXDI03	VDD12	EXA5	VDD12	GND12	SDITDO	SDITDI	GPI000	GPI001	GPI002	F
G								VDD12	GPI003	GPI004	GPI005	GPI006	GPI007	G
H								VDDTC12	YSCAN20	YSCAN19	YSCAN18	YSCAN17	YSCAN16	H
J								VDD12	GNDTC12	YSCAN15	VDD33	GND33	YSCAN14	J
K								VDDTC12	YSCAN13	YSCAN12	YSCAN11	YSCAN10	YSCAN9	K
L	GND12	GND12	GND12					VDD12	GND12	YSCAN8	YSCAN7	YSCAN6	YSCAN5	L
M	GND12	GND12	GND12					VDD12	GNDTC12	YSCAN4	YSCAN3	YSCAN2	YSCAN1	M
N	GND12	GND12	GND12					VDD12	GND12	YSCAN0	VDD33	GND33	VSUS10	N
P	GND12	GND12	GND12					VDDTC12	YSUS9	YSUS8	YSUS7	YSUS6	VSUS5	P
R	GND12	GND12	GND12					VDD12	GNDTC12	YSUS4	YSUS3	YSUS2	VSUS1	R
T	GND12	GND12	GND12					YSUS0	RSV1	RSV0	VDD33	GND33	AFE_PS_N	T
U								VDDL12	GNDLA	VDDLA	GNDLA	TXOUTP050	TXOUTM050	U
V								VDDLA	GNDLA	VDDLA	GNDLA	TXOUTP051	TXOUTM051	V
W								VDDLA	GNDLA	VDDLA	GNDLA	TXOUTP052	TXOUTM052	W
Y								VDDL12	GNDLA	VDDLA	GNDLA	TXCLKOUTP05	TXCLKOUTM05	Y
AA	VDDLA	VDDLA	VDDL12	VDDLA	VDDLA	VDDL12	VDDLA	VDDLA	VDDLA	VDDLA	GNDLA	TXOUTP053	TXOUTM053	AA
AB	VREF12	GNDBG	GNDLA	GNDLA	GNDLA	GNDLA	GNDLA	GNDLA	GNDLA	VDDLA	GNDLA	TXOUTP040	TXOUTM040	AB
AC	VDDLA	VDDLA	VDDLA	VDDLA	VDDLA	VDDLA	VDDLA	VDDLA	VDDLA	VDDLA	GNDLA	TXOUTP041	TXOUTM041	AC
AD	GNDLA	GNDLA	GNDLA	GNDLA	GNDLA	GNDLA	GNDLA	GNDLA	GNDLA	GNDLA	GNDLA	TXOUTP042	TXOUTM042	AD
AE	TXOUTP013	TXCLKOUTP01	TXOUTP012	TXOUTP011	TXOUTP010	TXOUTP003	TXCLKOUTP00	TXOUTP002	TXOUTP001	TXOUTP000	GNDLA	TXCLKOUTP04	TXCLKOUTM04	AE
AF	TXOUTM013	TXCLKOUTM01	TXOUTM012	TXOUTM011	TXOUTM010	TXOUTM003	TXCLKOUTM00	TXOUTM002	TXOUTM001	TXOUTM000	GNDLA	TXOUTP043	TXOUTM043	AF

■ NJW1183L (HD AUDIO ASSY : IC3753)

• FOCUS & SRS IC

● Pin Arrangement (Top view)

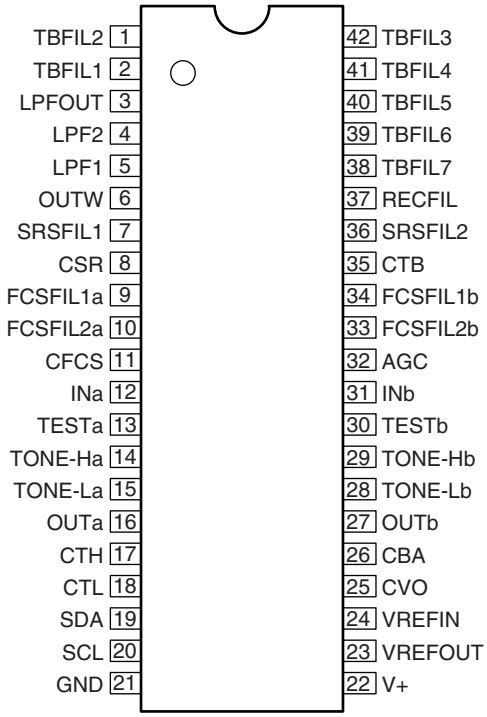

● Block Diagram

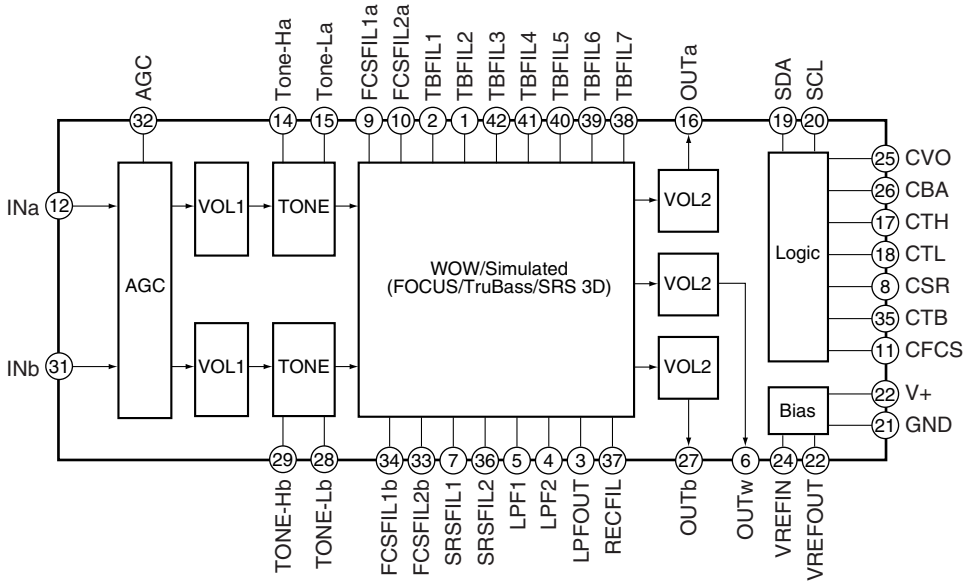

8. PANEL FACILITIES

Front view

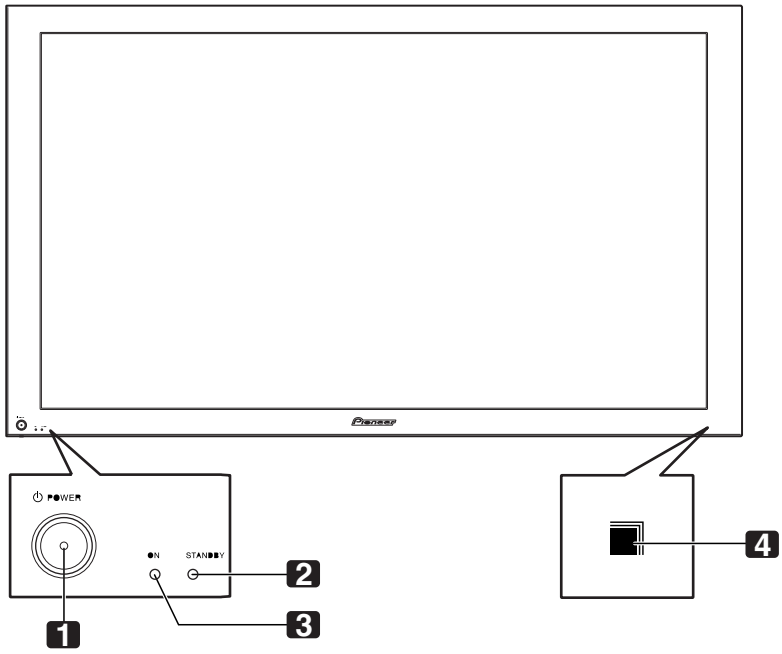

1 **POWER** button
2 STANDBY indicator
3 POWER ON indicator
4 Remote control sensor

Rear view

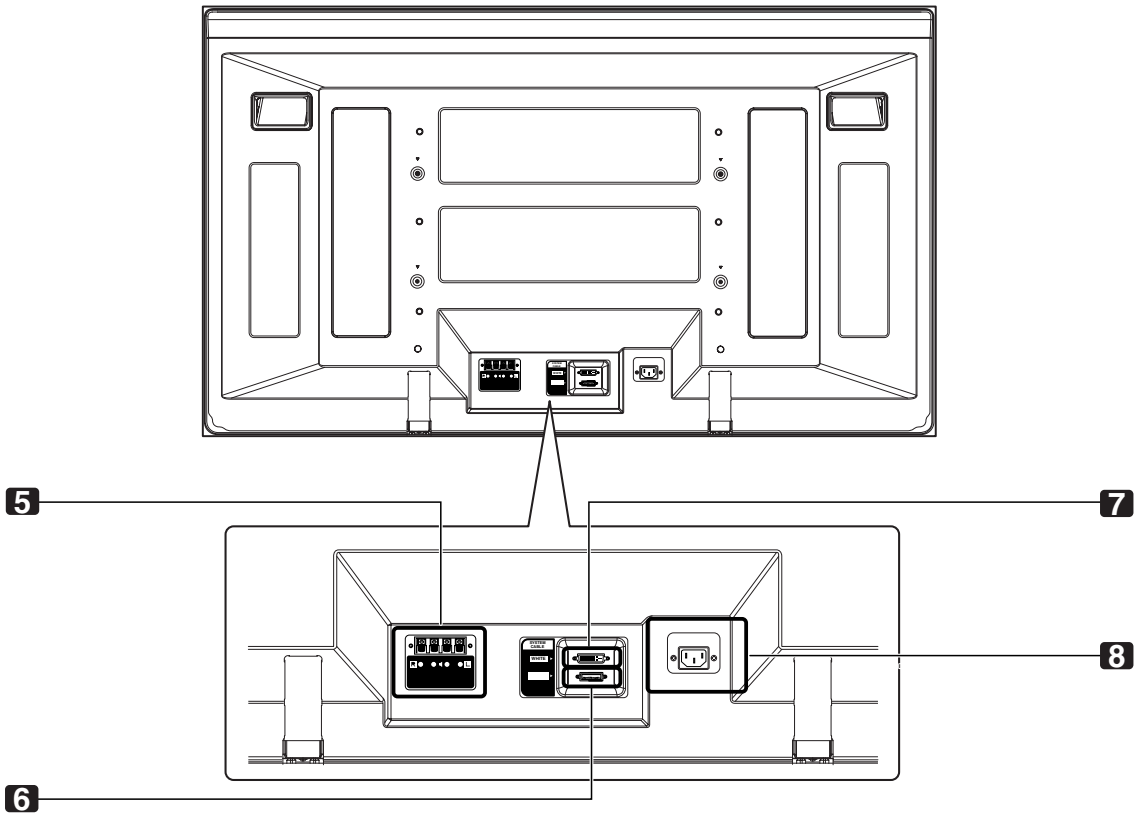

5 SPEAKER (right/left) terminals
6 SYSTEM CABLE terminal (BLACK)
7 SYSTEM CABLE terminal (WHITE)
8 AC IN terminal

A

B

C

D

E

F

■ Jigs list

Jig No.	Jig Name	Remarks
GGF1475	Special Communication Device	See to "6.2 RS-232C COMMAND".